CAFÉ 36″ Hood Frame

CVX36TAPER

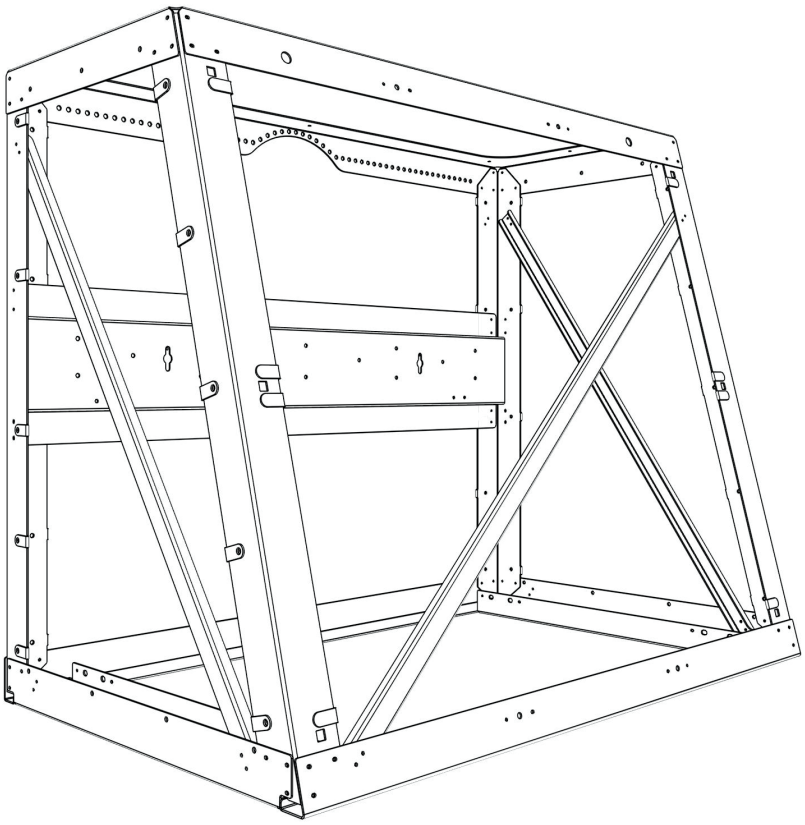

WEIGHTS & DIMENSIONS

Approximate Shipping Weight	133 lbs
Frame Weight	32 lbs
Panels Weight	56 lbs
Raw Frame Height	29 in
Raw Frame Width	34 1/2 in
Raw Frame Depth at top	14 in
Raw Frame Depth at bottom	21 1/2 in
Finished Height*	30 in
Finished Width*	36 in
Finished Depth at top*	14 1/2 in
Finished Depth at bottom*	22 1/2 in

FEATURES & BENEFITS

Pairs perfectly with the UVC9300 insert** to create a ready-to-finish custom hood installation.

Eliminates the need to build a square and strong cabinet. Simply install to the wall and finish to your preferred appearance.
No critical cabinetmaking skills required.

Includes paintable wood panels pre-cut and pre-drilled and ready for installation. Top panel, front panel and side panels are all included.

Supports rear venting and top venting to meet specific installation needs.

Add your own materials to finish the appearance to your personal style.***

Install over either 30" or 36" range/cooktop.

*When 3/4″ thick panels installed.
**UVC9300 insert must be ordered separately.
*** Requires general woodworking skills to finish to final appearance.

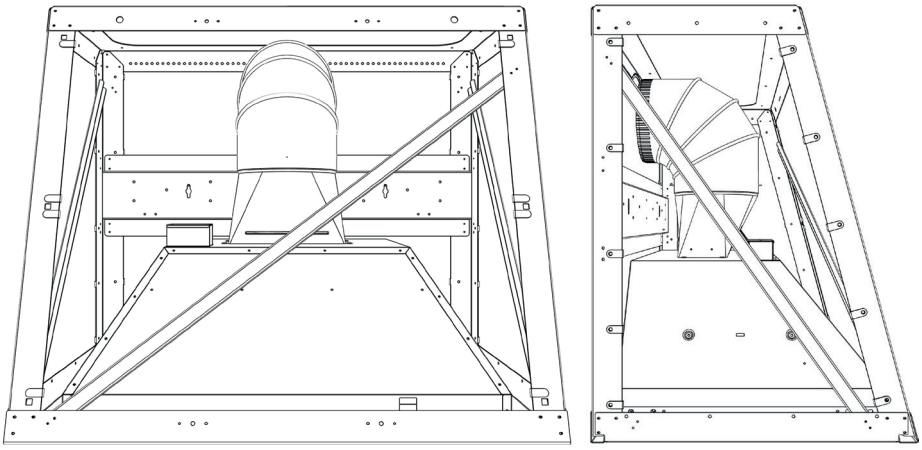

Shown with UVC9300 insert installed and vented out the back

© 2026 GE Appliances

CAFÉ 36″ Hood Frame

CVX36TAPER

DIMENSIONS AND INSTALLATION INFORMATION

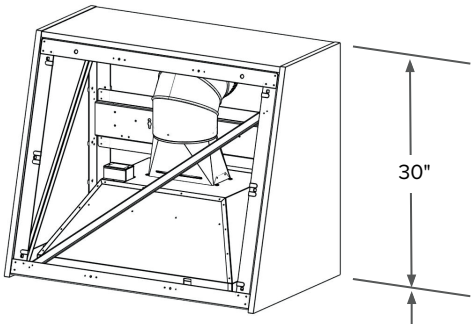

Shown with front panel removed.

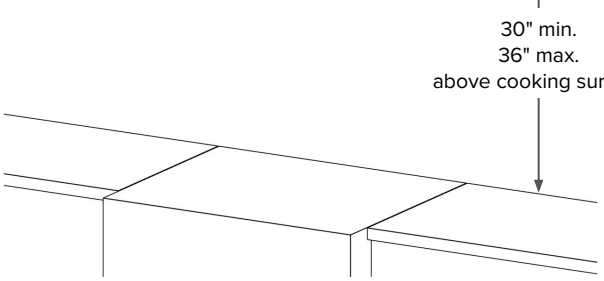

BARE FRAME

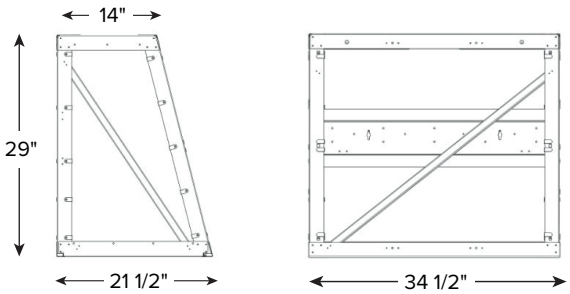

SIDE VIEW FRONT VIEW

AFTER 3/4″ PANELS INSTALLED AND FINISHED AS PER INSTRUCTIONS

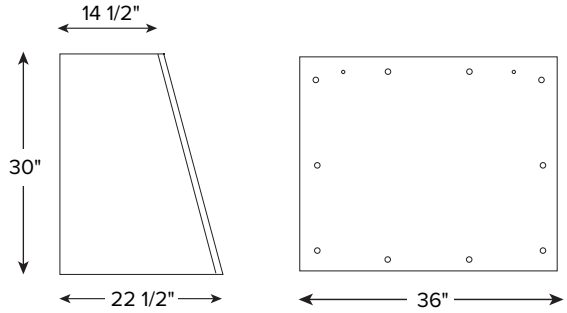

SIDE VIEW FRONT VIEW

See installation instructions for detailed frame and panel dimensions.

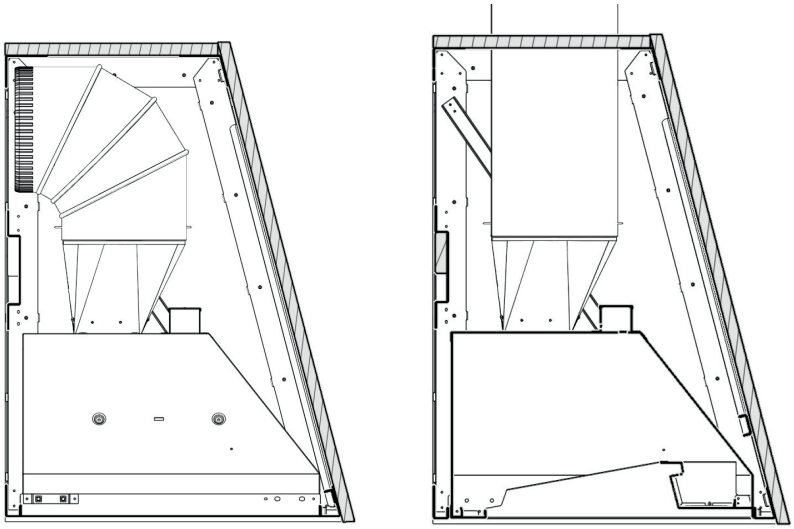

Can be installed with rear venting or top venting.
See installation instructions for vent location details.

Before installation, consult installation instructions packed with product for current dimensional data.

© 2026 GE Appliances