Inverter Air Conditioner

Technical Manual

Models:

DYC024GCSI18RD **DYC036GCSI18RD**

DYC048GCSI18RD **DYC060GCSI18RD**

CONTENTS

Part 1. General Information 2
1. Model Names of Indoor/Outdoor Units 2
2. Appearance 2
3. Features 2
Part 2. Indoor Unit 2
1. Specifications 2
2. Dimensions 2
3. Service Space 2
4. Four-Way Installation 2
5. Air Filter 2
6. Electric Heater 2
7. Airflow Performance 2
8. Wiring Diagrams 2
9. Electrical Characteristics 2
10. Wiring Specifications 2
11. Field Wiring 2
12. RS485 Communication Wiring 2
13. Water Float Switch Wiring 2
14. Exploded View 2
Part 3. Outdoor Unit 2
1. Specifications 2
2. Dimensions 2
3. Service Space 2
4. Wiring Diagrams 2
5. Electrical Characteristics 2
6. Operation Limits 2
7. Sound Levels 2
8. Exploded View 2
9. Troubleshooting 2
Part 4. Function Introduction 2
1. Electrical Components Description 2
2. Control Logic Description 2
3. Anti-Cold Air & Heating Fan Delay Function 2
4. Indoor Coil Anti-Freezing Function 2
5. R454B Leakage Detection Function 2

CONTENTS

6. Accelerated Operation Mode 2
7. Defrost Description 2
8. Forced Operating Mode 2
9. Use the USB to Update the ODU Program 2
10. Capacity Model Selection 2
Part 5. Installation 2
1. Installation Precautions 2
2. Oil Return Bend Installation 2
3. Vacuum Dry & Leakage Checking 2
4. Additional Refrigerant Charge 2
5. Insulation Work 2
6. Test Operation 2

Part 1 General Information

1. Model Names of Indoor/Outdoor Units

Indoor Units

Model Name	Dimension (W×D×H) (inch)	Power Supply
DC024GCSICDHRT	19-5/8×22×45-3/4	208/230V-1Ph-60Hz
DC036GCSICDHRT	19-5/8×22×45-3/4	208/230V-1Ph-60Hz
DC048GCSICDHRT	22×24-1/2×53-1/8	208/230V-1Ph-60Hz
DC048GCSICDHRT	22×24-1/2×53-1/8	208/230V-1Ph-60Hz

Outdoor Units

Model Name	Dimension (W×D×H) (inch)	Power Supply
YD2436GCSI18RD	29-1/8×29-1/8×25	208/230V-1Ph-60Hz
		208/230V-1Ph-60Hz
YD4860GCSI18RD	29-1/8×29-1/8×32	208/230V-1Ph-60Hz
		208/230V-1Ph-60Hz

2. Appearance

Outdoor Unit	
Photo	
Model	YD2436GCSI18RD YD4860GCSI18RD
Indoor Unit	
Photo	
Model	DC024GCSICDHRT DC036GCSICDHRT DC048GCSICDHRT DC060GCSICDHRT

3. Features

1) A wide operation range.
2) A well-known brand inverter compressor of reliable quality.
3) Condenser coils constructed with copper tubing and enhanced golden fins.
4) Use TXV (cooling) as an expansion device, and the heat pump type with EXV.
5) DC fan motors that provide air flow selections to meet desired applications.
6) An ECM fan motor for air handlers that provides higher efficiency, lower noise, and constant speed.
7) A 24V control that includes a time delay relay, fan relay, and compressor.
8) R454b environmental-friendly refrigerant.
9) An air handler unit with a refrigerant leakage sensor, which provides safer protection.
10) AHRI and ETL certifications.
11) Energy efficiency up to 20SEER2
12) Multiple defrosting modes.
13) RS485 communication mode and the manufacturer's wired controller that can query the operating parameters of the indoor unit.
14) The main board program can be upgraded with a USB, which doesn't need a computer or special burning tool.
15) Multiple operating modes are available, including Accelerated Cooling/Heating and Forced Cooling/Heating.
16) A refrigerant leakage sensor that is configured to detect the refrigerant content in the air.
17) An intelligent oil return program.
18) "A" shaped coils that are constructed with oxygen-free copper tubing and enhanced aluminum fins
19) A detachable air filter for cleaning or renewal.
20) A versatile 4-way convertible design. The air can be discharged from four directions.

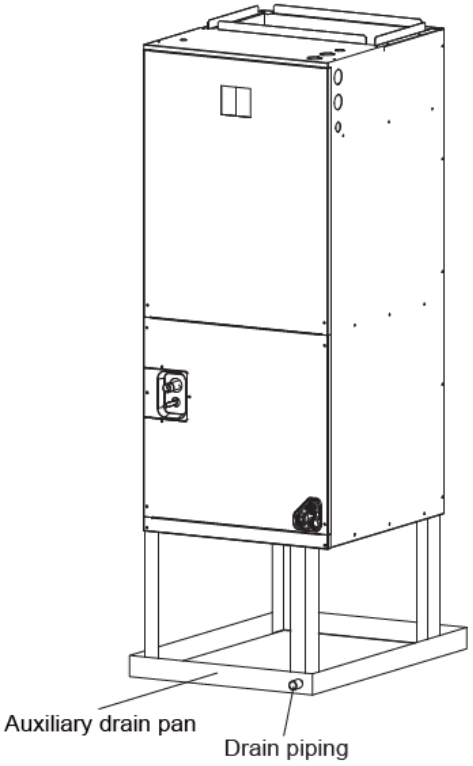

Figure 2.2 Vertical airflow installed

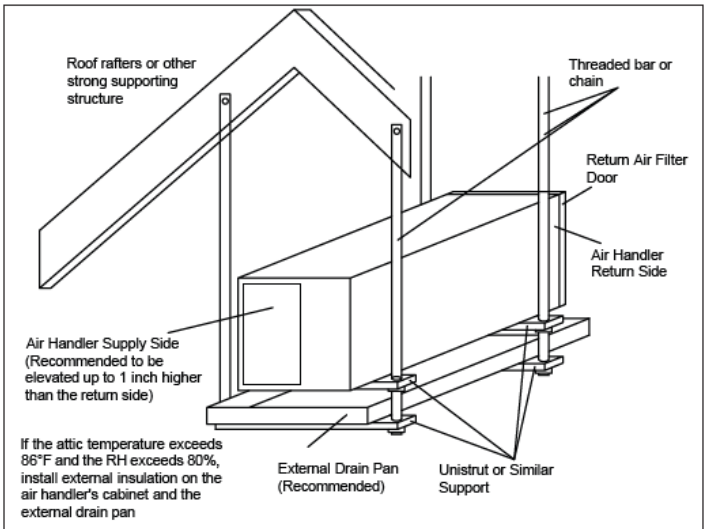

Figure 2.3 Horizontal installation, if suspended from above

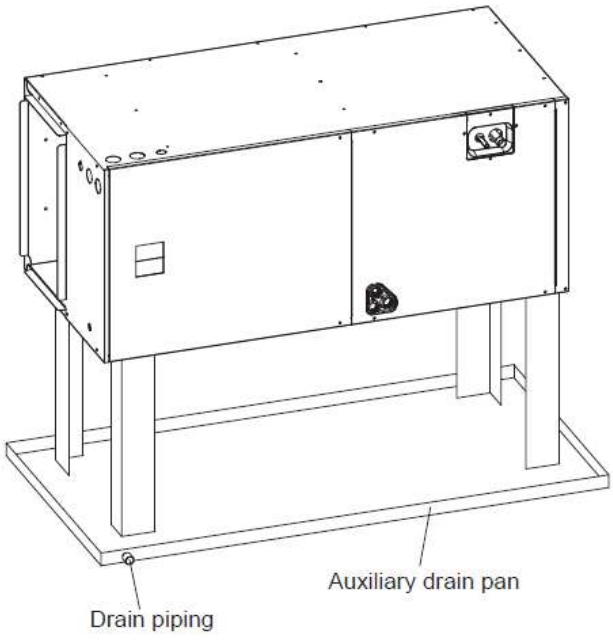

Figure 2.4 Horizontal installation, if supported by the floor

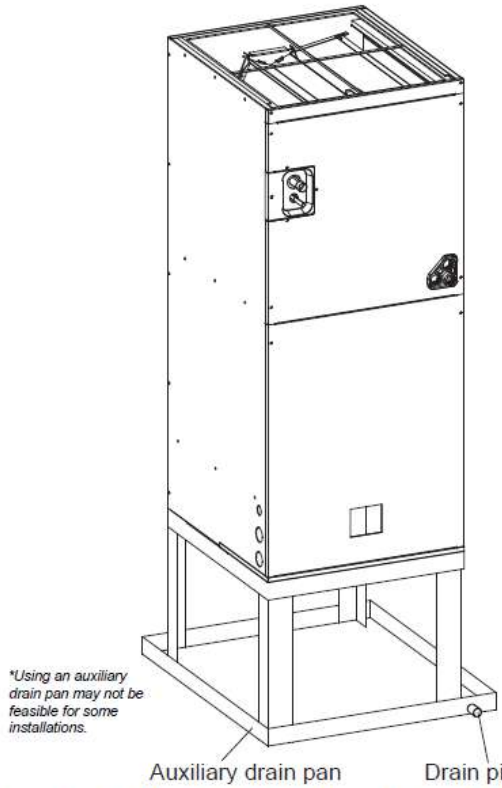

Figure 2.5 Vertical downward airflow installed

Part 2 Indoor Unit

1. Specifications

Model			DYC024GCSI18RD	DYC036GCSI18RD	DYC048GCSI18RD	DYC060GCSI18RD
Power Supply		V/Ph/Hz	208/230V-1Ph-60Hz			
Cooling	Capacity	Btu/h	24000	34000	47500	55000
	EER2	Btu/h.W	13.3	11.7	11.3	10
	SEER2	Btu/h.W	20	18.6	17.5	17
Heating	Capacity	Btu/h	24000	34200	48000	57000
		Btu/h (17°F)	19200	24000	40000	42000
		Btu/h (5℉)	20000	24000	34200	42500
	5°F COP		2.1	2.1	2.1	2
	HSPF2		9.4	9.0	9.0	8.6
Minimum Circuit Ampacity		A	4	4	5	5
Max. Overcurrent Protection		A	6	6	10	10
Indoor Coil	Number of Rows*Coil Quantity		4*2	4*2	2*4	2*4
	Tube Outside Diameter / Type		7mm / Rifled tube			
	Fin Spacing / Thickness / Type	mm / mm	1.6 / 0.095 / Hydrophilic aluminium			
	Length*Width*Height	mm	447*420*53.48		546*511*26.74	
	Tube Pitch(a) × Row Pitch(b)	mm	13.37*10.5	13.37*10.5	13.37*10.5	13.37*10.5
Indoor Motor	Type		ECM			
	Rated HP	HP	1/3	1/2	3/4	3/4
	Rated RPM	r/min	1050	1050	1050	1050
	FLA		2.6	3.8	5.4	5.4
Indoor Fan	Material		Galvanized plate			
	Type		Centrifugal			
	Diameter	in.	φ273×272×φ12.7-195	φ273×272×φ12.7-195	φ273×272×φ12.7-195	φ273×272×φ12.7-195
Indoor Air Flow		CFM	700	1050	1670	1850
ESP		Pa	125	125	125	125
Indoor Noise Level		dB(A)	51	52	59	59
Metering Device	Throttle Type		TXV			
	Model Number		3TR	3TR	5TR	5TR
Electrical Data	Voltage-Phase-Hz	V-Ph-Hz	208/230V 1Ph 60Hz			
	Minimum Circuit Ampacity		4	4	5	5
	Max. Overcurrent Protection		6	6	10	10
	Min / Max Volts	V	187 / 253	187 / 253	187 / 253	187 / 253
Indoor Unit	Dimension (W×H×D)	mm	500×1162×560		560×1350×620	
		in.	19-5/8×45-3/4×22		22×53-1/8×24-1/2	
	Packing (W×H×D)	mm	580×1210×650		640x1390x710	
		in.	22-5/6×47-5/8×25-3/5		25-1/5×54-3/4×28	
	Net / Gross Weight	kg	59 / 65	59 / 65	77 / 83	77 / 83
		lbs	130 / 143	130 / 143	169 / 182	169 / 182
Refrigerant Piping Liquid Side / Gas Side		in.	3/8 / 3/4	3/8 / 3/4	3/8 / 7/8	3/8 / 7/8

Notes:
1) Nominal cooling capacities are based on the following conditions:
Indoor temperature: 80.6°F(27°C) DB, 66.2°F(19°C) CWB | Outdoor temperature: 95°F(35°C) DB | Equivalent ref. piping: 16.4 ft / 5m (horizontal).
2) Actual noise level may differ, depending on the room structure, etc., since these noise values are from an anechoic room.

2. Dimensions

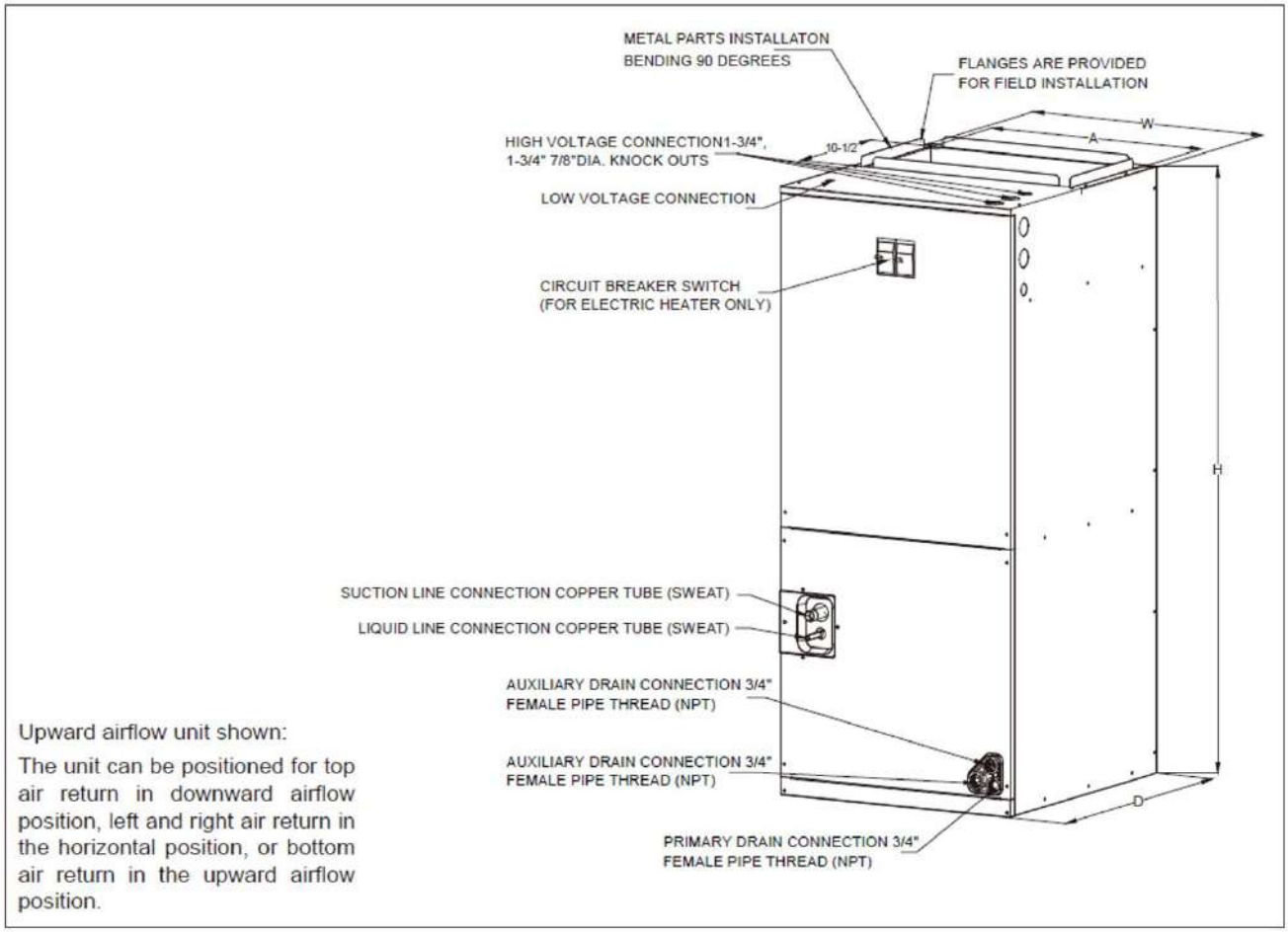

Figure 1 Dimensions					
Dimensional Data					
Model Size	**Dimensions**				
	Unit Height "H" in (mm)	**Unit Width "W" in (mm)**	**Unit Length "D" in (mm)**	**Supply Duct "A" in (mm)**	**Liquid Line | Vapor Line in (mm)**
24K	45-3/4 [1162]	19-5/8 [500]	22 [560]	17-7/8 [454]	3/8 | 3/4 [9.5]/[19]
36K	45-3/4 [1162]	19-5/8 [500]	22 [560]	17-7/8 [454]	3/8 | 3/4 [9.5]/[19]
48K	53-1/8 [1350]	22 [560]	24 -1/2[623]	19-1/2 [496]	3/8 | 7/8 [9.5]/[22]
60K	53-1/8 [1350]	22 [560]	24 -1/2[623]	19-1/2 [496]	3/8 | 7/8 [9.5]/[22]

3. Service Space

The distance between the air outlet or return air and the wall must be at least 40 in. The front of the indoor unit must be at least 25 in away from the wall.

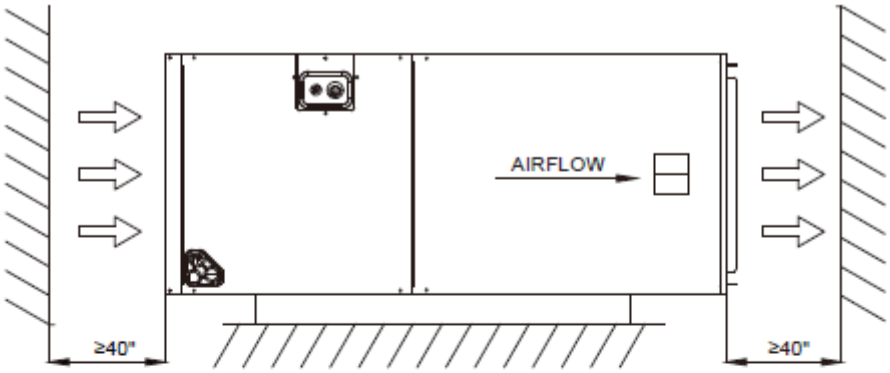

Clearances in the Horizontal Position

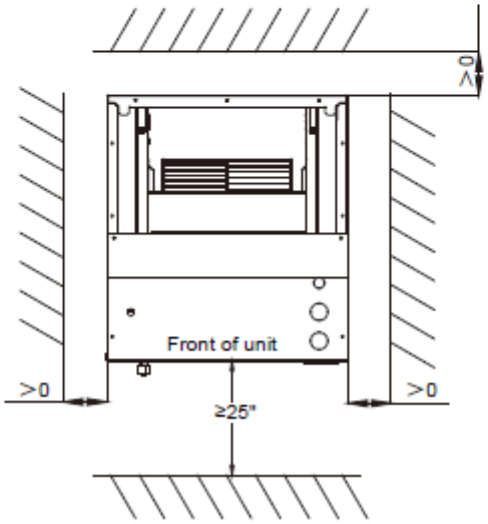

4. Four-Way Installation

Horizontal right installation is the default factory configuration for all the models.

By removing the indoor coil assembly and reinstalling the coil, the vertical up flow position can be converted into a horizontal left position. Rotate the device by 90° to the horizontal left position, with the coil segment on the right and the blower segment on the left. Reinstall the indoor coil by rotating 180° from the original position. Ensure the fixing groove is fully engaged with the coil guide rail. When configured for horizontal placement above the ceiling or living space, an additional field-supplied drain pan is recommended.

Steps to Change the Cabinet Direction to Vertical Downward or Horizontal Left Direction

1) Remove the screws and front panel. Disconnect the plug of the T1 sensor, T2 sensor, and leak detection sensor wire from the circuit board (Figure 4.1, Step 1).

2) Pull out the coil with the sensor wire. Do not disconnect the T1 sensor, T2 sensor, and leakage detection sensor from the coil (Figure 4.2, Step 2).

3) Install the coil in the correct direction and secure it in place. Reinsert those sensor wires in PCBA through the gap on the cabinet cover (Figure 4.3, Step 3).

Figure 4.1

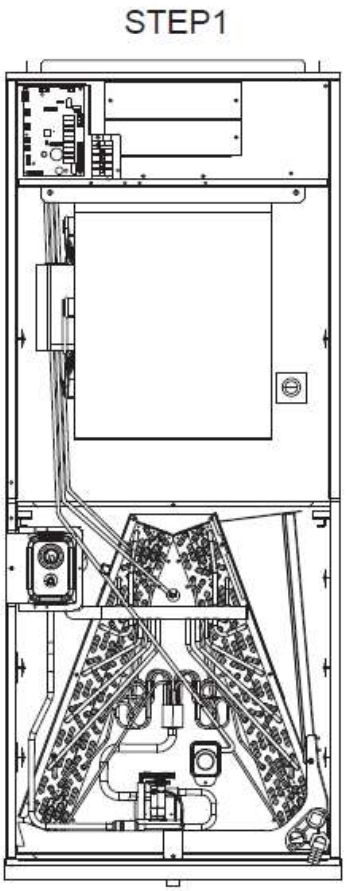

Figure 4.2

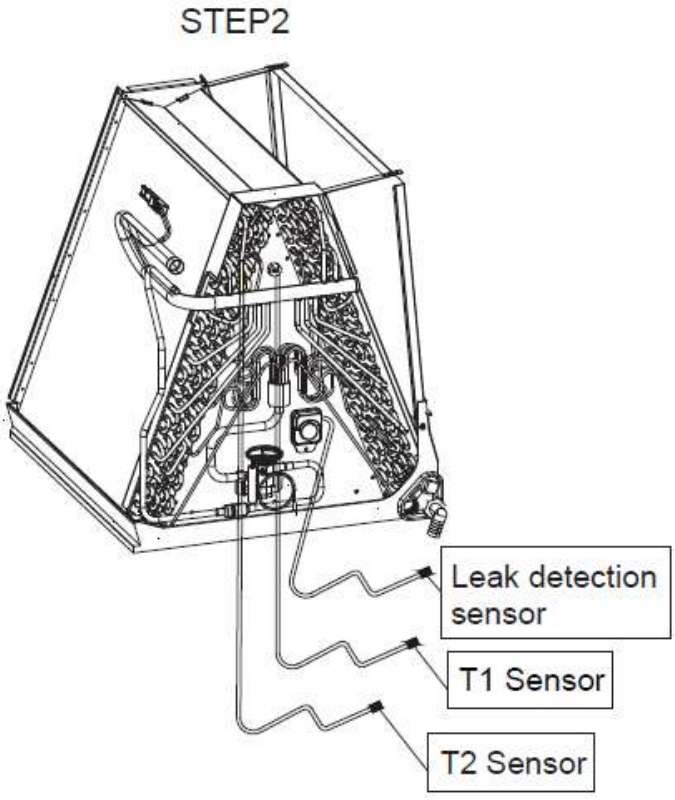

Figure 4.3

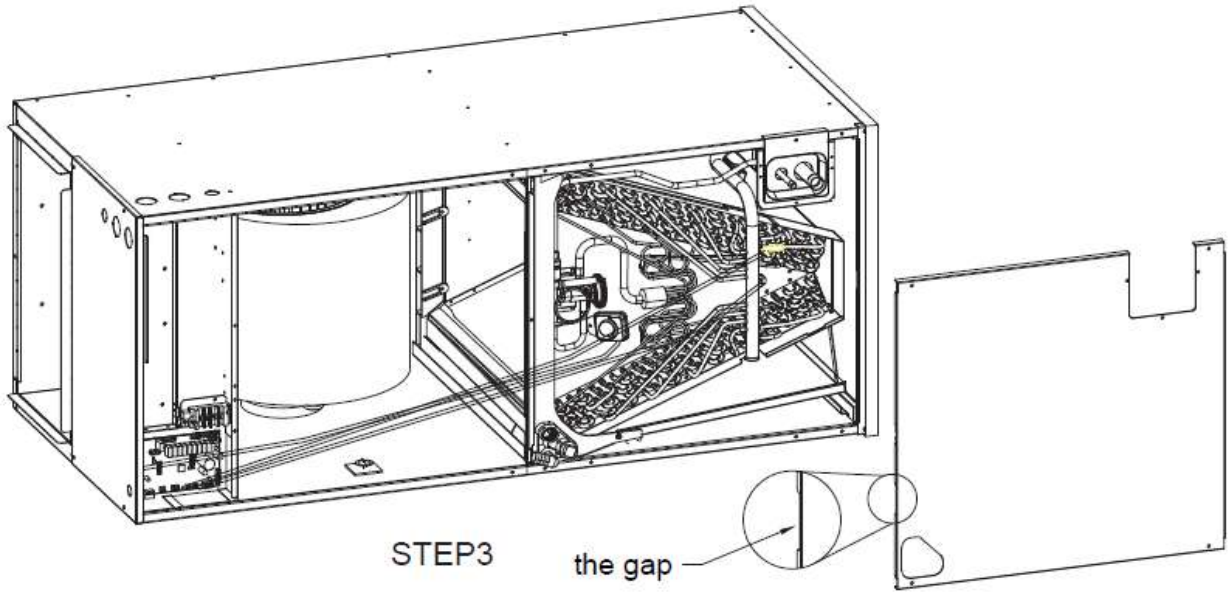

Figure 4.4

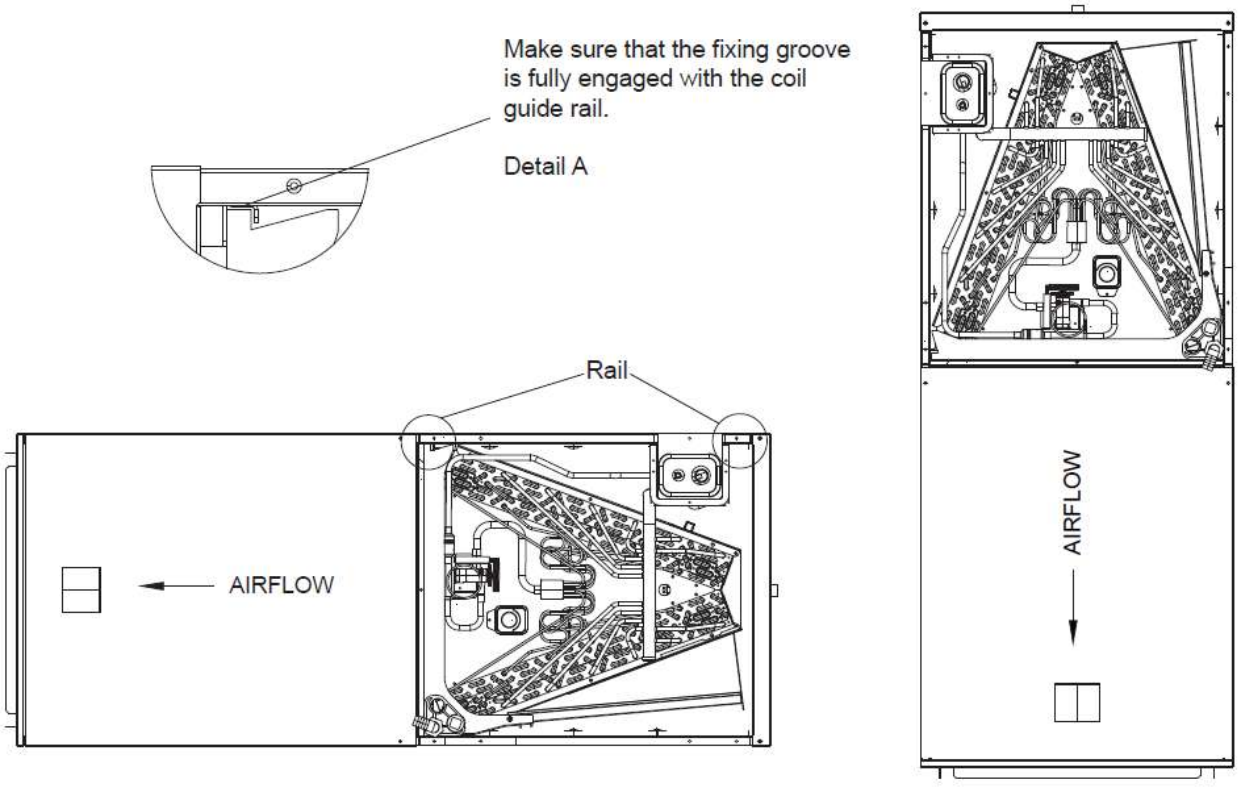

5. Air Filter (Not Factory Installed)

The filter is not included in the device and must be provided on site.

The size of the external filters or other filtering devices must meet the maximum flow rate of 300ft/min (91.4m/min) or meet the recommended value of the filter type.

The application and placement of the filter is important for airflow, which may affect the performance of heating and cooling system. The reduced airflow will shorten the life of the main components of the system, such as motors, thermal relays, evaporator coils, or compressors. Therefore, we recommend that the return air duct system only has one filter position. For systems without return air filter grids, install multiple filter grids at each return air opening.

If a high-efficiency filter screen or electronic air filtration system is used, it is important that the air flow rate is not reduced. If the air flow decreases, the overall performance and efficiency of the device will decrease.

We recommend contacting professional installation technicians to ensure the correct installation of the filtration systems.

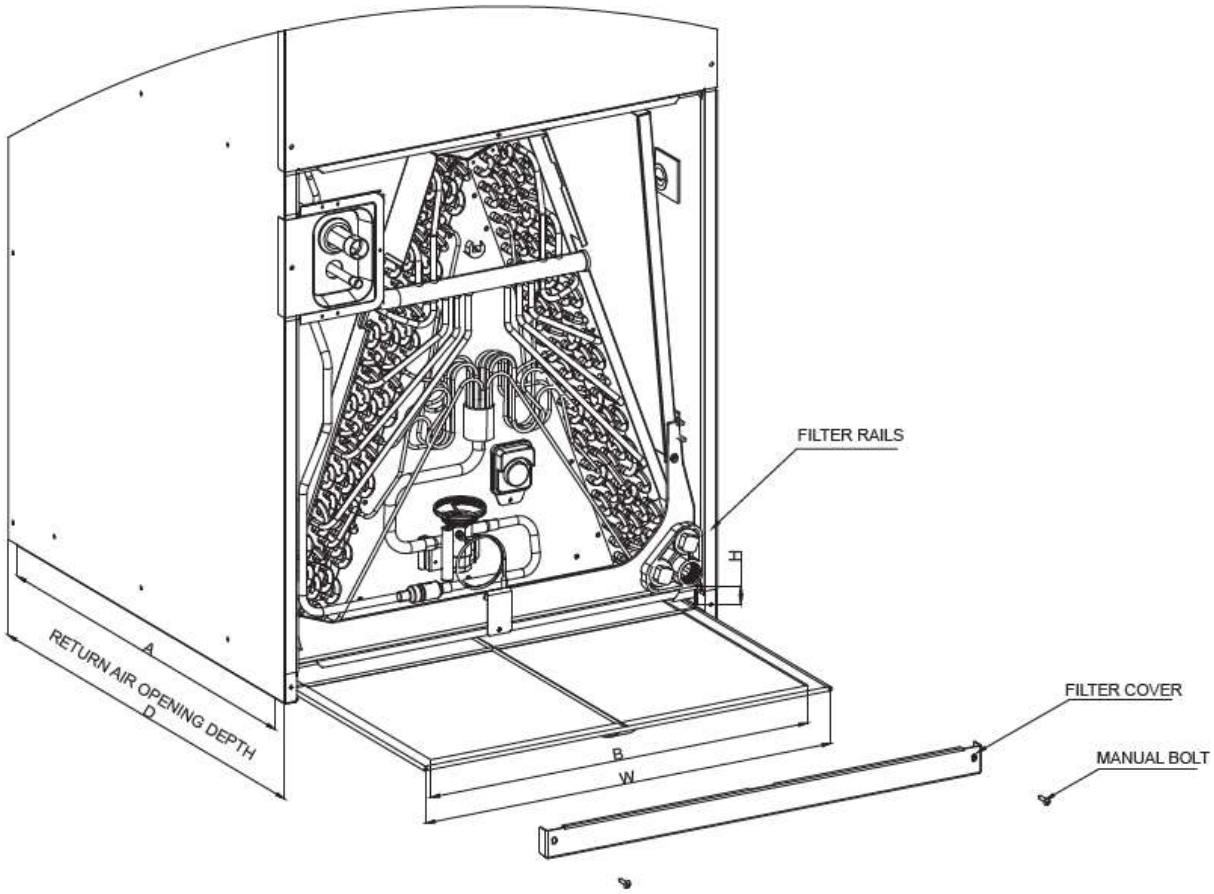

Model	Filter size inches [mm]	"W" Inch [mm]	"D" Inch [mm]	"H" Inch [mm]	Return Width "A" inch [mm]	Return Length "B" inch [mm]
24K/36K	18.1×21.4[460×544]	18.3 [466]	21.6 [548]	1 [25.4]	20.8 [528]	16.3 [414]
48K/60K	20.5×23.8[521×605]	20.7 [526]	23.9 [608]	1 [25.4]	23 [584]	18.8 [478]

6. Electric Heater

Heat Kit Model	AHU Model	Electric Heat	Min. Circuit Ampacity		Max. Fuse or Breaker Ampacity		Fan Speed				
		(kW)	208 VAC	230 VAC	208 VAC	230 VAC	1	2	3	4	5
21-4444-01	24K	5	20	25	30	35	●	●	●	●	●
21-4444-02		7.5	30	35	40	45	×	×	●	●	●
21-4444-03		10	40	45	55	60	×	×	×	●	●
21-4444-01	36K	5	20	25	30	35	●	●	●	●	●
21-4444-02		7.5	30	35	40	45	×	●	●	●	●
21-4444-03		10	40	45	55	60	×	×	●	●	●
21-4444-04		15	30+30	35+35	40+40	45+45	×	×	×	●	●
21-4444-01	48K	5	20	25	30	35	●	●	●	●	●
21-4444-02		7.5	30	35	40	45	●	●	●	●	●
21-4444-03		10	40	45	55	60	×	●	●	●	●
21-4444-04		15	30+30	35+35	40+40	45+45	×	×	●	●	●
21-4444-05		20	40+40	45+45	55+55	60+60	×	×	×	●	●
21-4444-01	60K	5	20	25	30	35	●	●	●	●	●
21-4444-02		7.5	30	35	40	45	●	●	●	●	●
21-4444-03		10	40	45	55	60	×	●	●	●	●
21-4444-04		15	30+30	35+35	40+40	45+45	×	×	●	●	●
21-4444-05		20	40+40	45+45	55+55	60+60	×	×	×	●	●

● indicates availability. × indicates unavailability.

7. Airflow Performance

The air flow data is based on the cooling performance of the coil and without a filter. Select the appropriate product from the Performance table.

Keep the external static pressure (ESP) within the minimum and maximum limits shown in the following table to ensure the normal operation of cooling, heating, and electric heating.

Model size of air processor	Motor speed		SCFM								
			External Static Pressure-Inch Water Column [kPa]								
			0[0]	0.1[.02]	0.2[. 05]	0.3[.07]	0.4[.10]	0.5[.12]	0.6[.15]	0.7[.17]	0.8[.20]
24K	Tap (5)	SCFM	1193	1130	1072	1002	931	853	781	722	653
		Watts	139	145	154	161	171	177	187	197	202
	Tap (4)- default high fan	SCFM	1128	1060	998	920	850	766	693	622	573
		Watts	117	122	132	139	148	155	164	170	180
	Tap (3)	SCFM	1028	971	905	827	753	664	598	535	493
		Watts	95	102	111	118	127	133	141	148	156
	Tap (2)- Default low fan	SCFM	907	826	752	657	574	498	445	-	-
		Watts	66	71	79	85	93	100	107	-	-
	Tap (1)	SCFM	697	589	484	382	320	-	-	-	-
		Watts	34	37	45	49	56	-	-	-	-
36K	Tap (5)	SCFM	1491	1438	1390	1337	1290	1245	1187	1112	1053
		Watts	250	256	266	273	284	297	309	317	327
	Tap (4)- default high fan	SCFM	1357	1309	1250	1206	1158	1093	1018	960	890
		Watts	193	205	209	220	231	239	251	262	268
	Tap (3)	SCFM	1238	1184	1115	1069	1006	931	870	792	728
		Watts	147	157	163	174	181	193	204	210	220
	Tap (2)- Default low fan	SCFM	1116	1055	987	932	850	789	720	639	562
		Watts	113	127	128	139	146	157	167	174	183
	Tap (1)	SCFM	1061	937	851	762	692	599	536	472	432
		Watts	100	94	96	104	113	119	128	134	142
48K	Tap (5)	SCFM	2081	2047	2011	1974	1933	1884	1823	1768	1718
		Watts	520	532	543	554	566	570	567	563	560
	Tap (4)- default high fan	SCFM	1914	1874	1830	1787	1744	1703	1660	1609	1571
		Watts	407	418	432	439	449	460	473	479	483
	Tap (3)	SCFM	1766	1720	1675	1636	1588	1540	1486	1441	1392
		Watts	317	327	337	349	358	367	378	386	403
	Tap (2)- Default low fan	SCFM	1559	1514	1462	1408	1362	1318	1265	1203	1137
		Watts	214	235	246	252	263	273	284	296	308
	Tap (1)	SCFM	1370	1319	1271	1215	1164	1102	1035	950	882
		Watts	159	169	179	185	195	207	219	228	239
60K	Tap (5)	SCFM	2081	2047	2011	1974	1933	1884	1823	1768	1718
		Watts	520	532	543	554	566	570	567	563	560
	Tap (4)- default high fan	SCFM	1914	1874	1830	1787	1744	1703	1660	1609	1571
		Watts	407	418	432	439	449	460	473	479	483
	Tap (3)	SCFM	1766	1720	1675	1636	1588	1540	1486	1441	1392
		Watts	317	327	337	349	358	367	378	386	403
	Tap (2)- Default low fan	SCFM	1559	1514	1462	1408	1362	1318	1265	1203	1137
		Watts	214	235	246	252	263	273	284	296	308
	Tap (1)	SCFM	1370	1319	1271	1215	1164	1102	1035	950	882
		Watts	159	169	179	185	195	207	219	228	239

The highlighted area indicates the airflow is within the required range of 300-450 cfm/ton.

8. Wiring Diagrams

24K / 36K / 48K / 60K

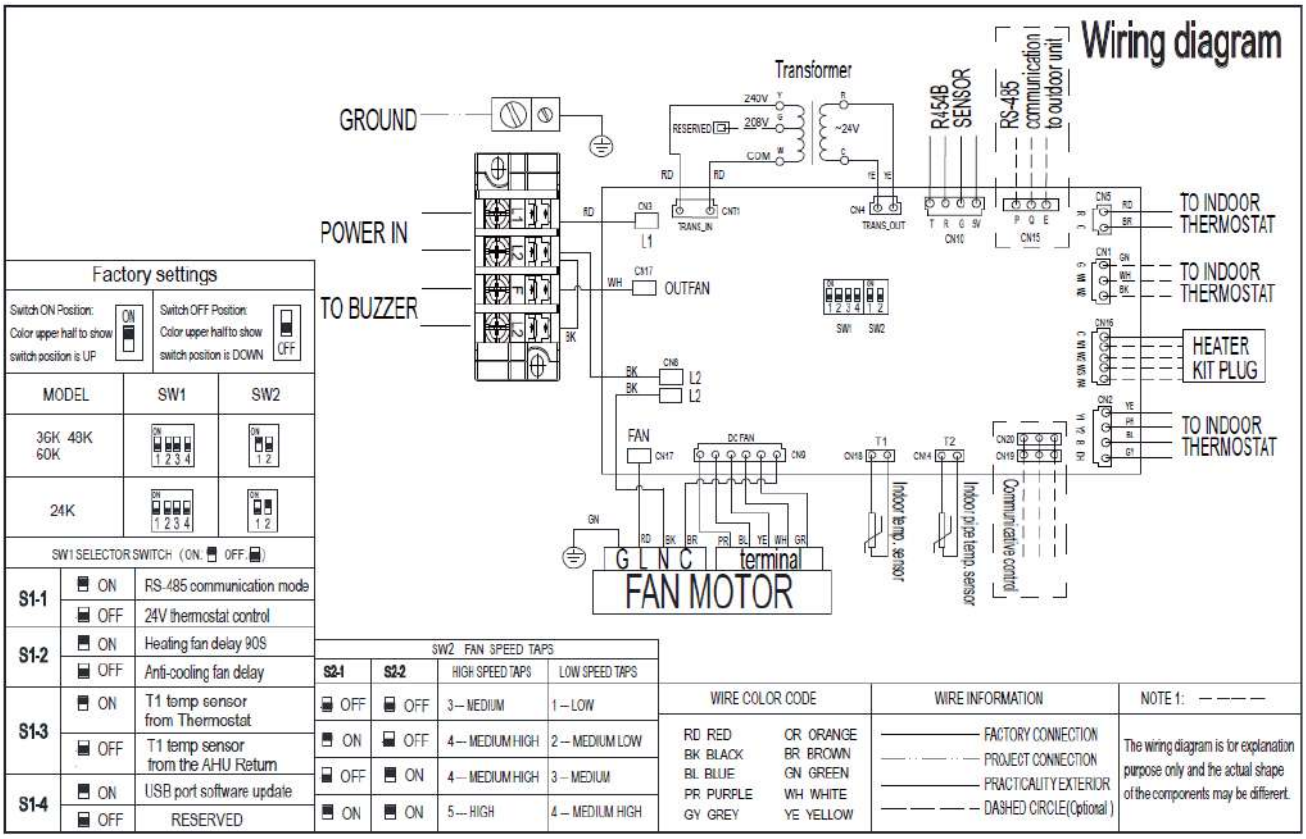

Factory settings

Switch ON Position: Color upper half to show switch position is UP

Switch OFF Position: Color upper half to show switch position is DOWN

MODEL	SW1	SW2
36K 48K 60K	1 2 3 4	1 2
24K	1 2 3 4	1 2

SW1 SELECTOR SWITCH (ON: ■ OFF: ■)

S1-1	ON	RS-485 communication mode
	OFF	24V thermostat control
S1-2	ON	Heating fan delay 90S
	OFF	Anti-cooling fan delay
S1-3	ON	T1 temp sensor from Thermostat
	OFF	T1 temp sensor from the AHU Return
S1-4	ON	USB port software update
	OFF	RESERVED

SW2 FAN SPEED TAPS

S2-1	S2-2	HIGH SPEED TAPS	LOW SPEED TAPS
OFF	OFF	3 -- MEDIUM	1 -- LOW
ON	OFF	4 -- MEDIUM HIGH	2 -- MEDIUM LOW
OFF	ON	4 -- MEDIUM HIGH	3 -- MEDIUM
ON	ON	5 -- HIGH	4 -- MEDIUM HIGH

WIRE COLOR CODE

RD RED	OR ORANGE
BK BLACK	BR BROWN
BL BLUE	GN GREEN
PR PURPLE	WH WHITE
GY GREY	YE YELLOW

WIRE INFORMATION

FACTORY CONNECTION
PROJECT CONNECTION
PRACTICALITY EXTERIOR
DASHED CIRCLE(Optional)

NOTE 1:

The wiring diagram is for explanation purpose only and the actual shape of the components may be different.

9. Electrical Characteristics

Model	Indoor Units					
	Hz	Voltage	Min.	Max.	MCA	MOP
24K	60	208-230V	187V	253V	6.0*2	15
36K	60	208-230V	187V	253V	6.0*2	15
48K	60	208-230V	187V	253V	6.0*2	15
60K	60	208-230V	187V	253V	6.0*2	15

10. Wiring Specifications

Note: The cross-section areas of the wires or lines must comply with the corresponding values listed in the table below. If the power wires are considerably long from the unit, choose the winding with the larger cross-section to guarantee the normal power supply.

Model	Type	Indoor Power Wire / Diameter (AWG)	24V Signal Wire Diameter (AWG)	Outdoor Power Wire Diameter (AWG)	RS485 Communication Wire Diameter (mm^2)
24K	Heat Pump	3*16	18	3*14	2 pin shielded cable 0.75mm^2
36K	Heat Pump	3*16	18	3*12	2 pin shielded cable 0.75mm^2
48K	Heat Pump	3*16	18	3*10	2 pin shielded cable 0.75mm^2
60K	Heat Pump	3*16	18	3*10	2 pin shielded cable 0.75mm^2

11. Field Wiring

1) To avoid the electrical shock, connect the air conditioner with the ground lug. When the main power plug in the air conditioner has been joined with the ground wiring, don't change it freely.
2) The power socket is used for the air conditioner specifically.
3) Don't pull the power wiring hard.
4) When connecting the air conditioner with the ground, observe the local codes.
5) If necessary, use the power fuse, circuit breaker, or corresponding scale ampere.

Power Supply Wiring

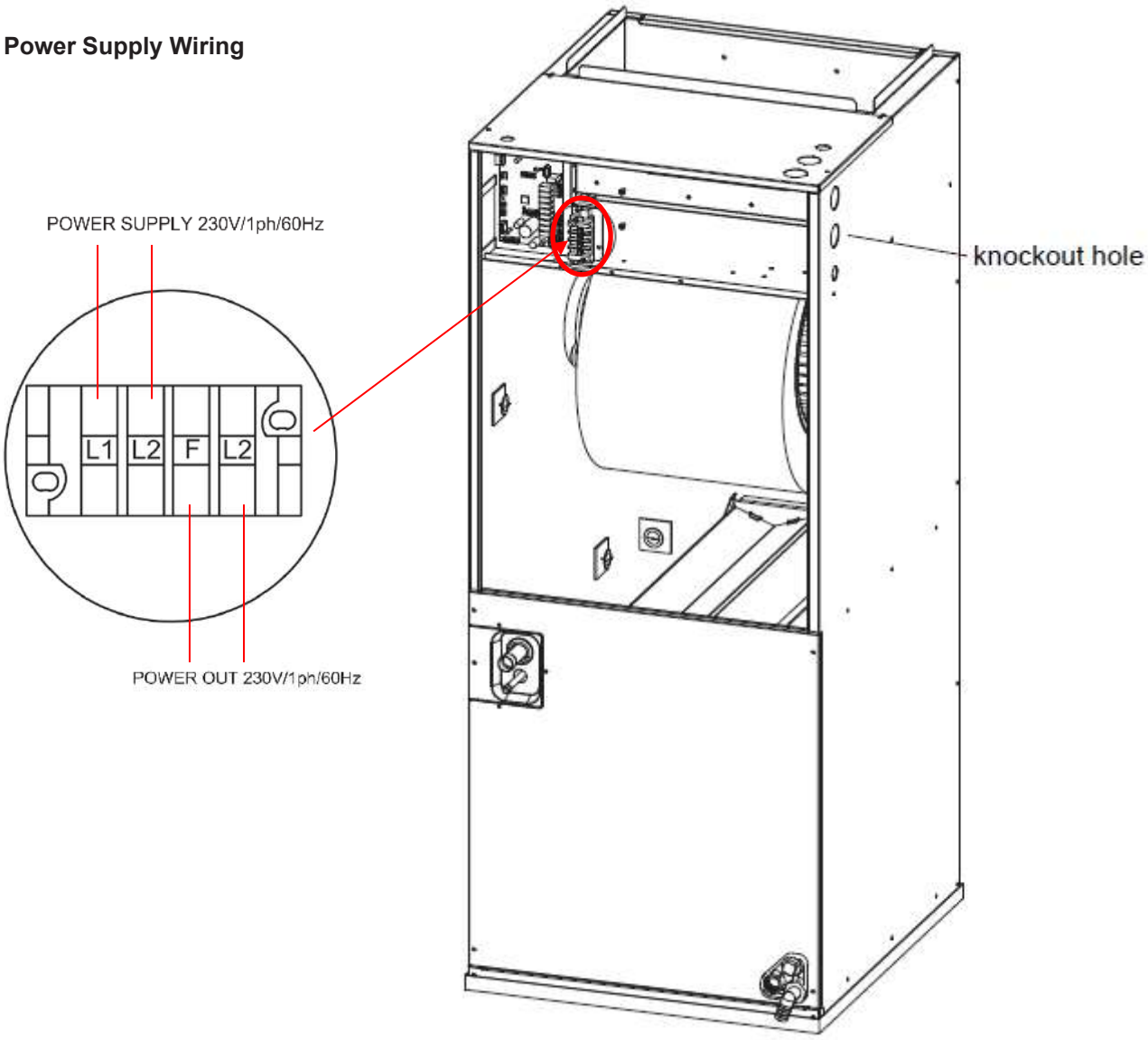

During installation, a buzzer or alarm light needs to be installed and connected to the terminal of AHU F/L2. When the AHU detects refrigerant leakage, F/L2 will output 220V voltage. Therefore, the buzzer will receive the signal and respond in time. When the refrigerant concentration reaches the threshold, the indoor airflow will run at the highest gear and the outdoor unit will stop.

24V Thermostat Wiring

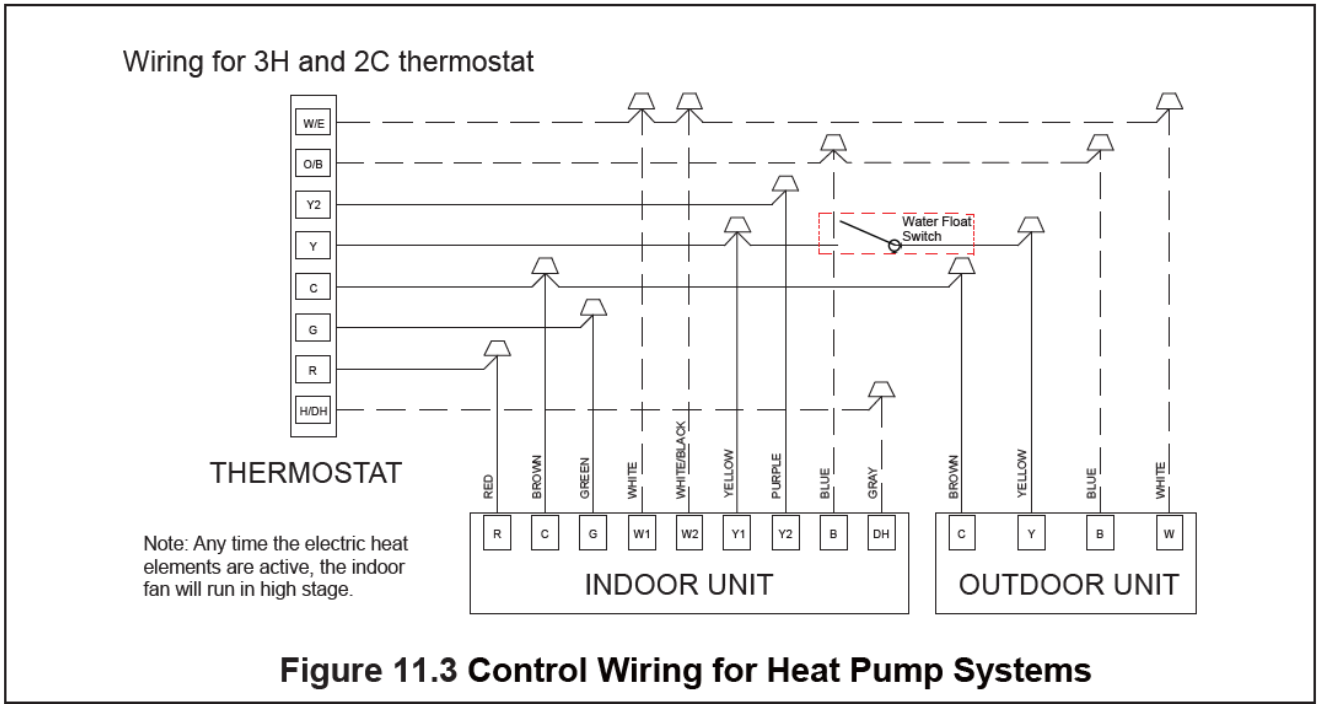

Figure 11.3 Control Wiring for Heat Pump Systems

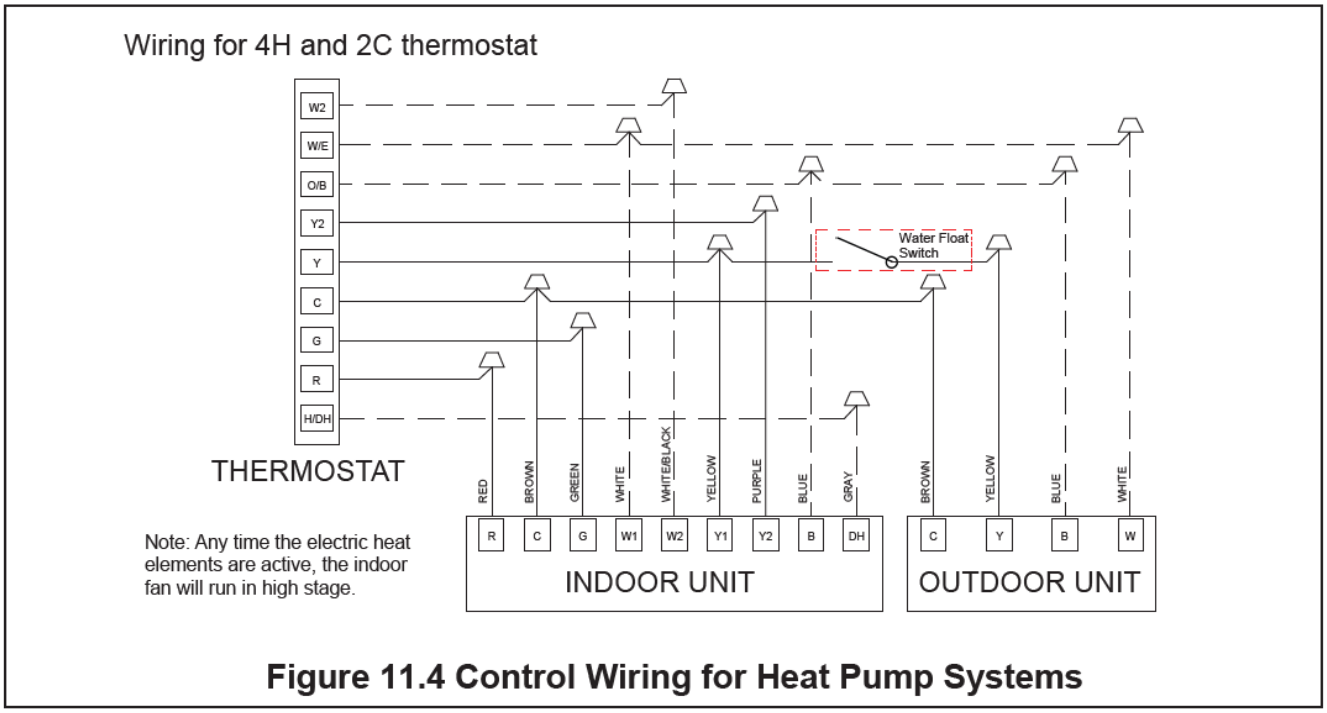

Figure 11.4 Control Wiring for Heat Pump Systems

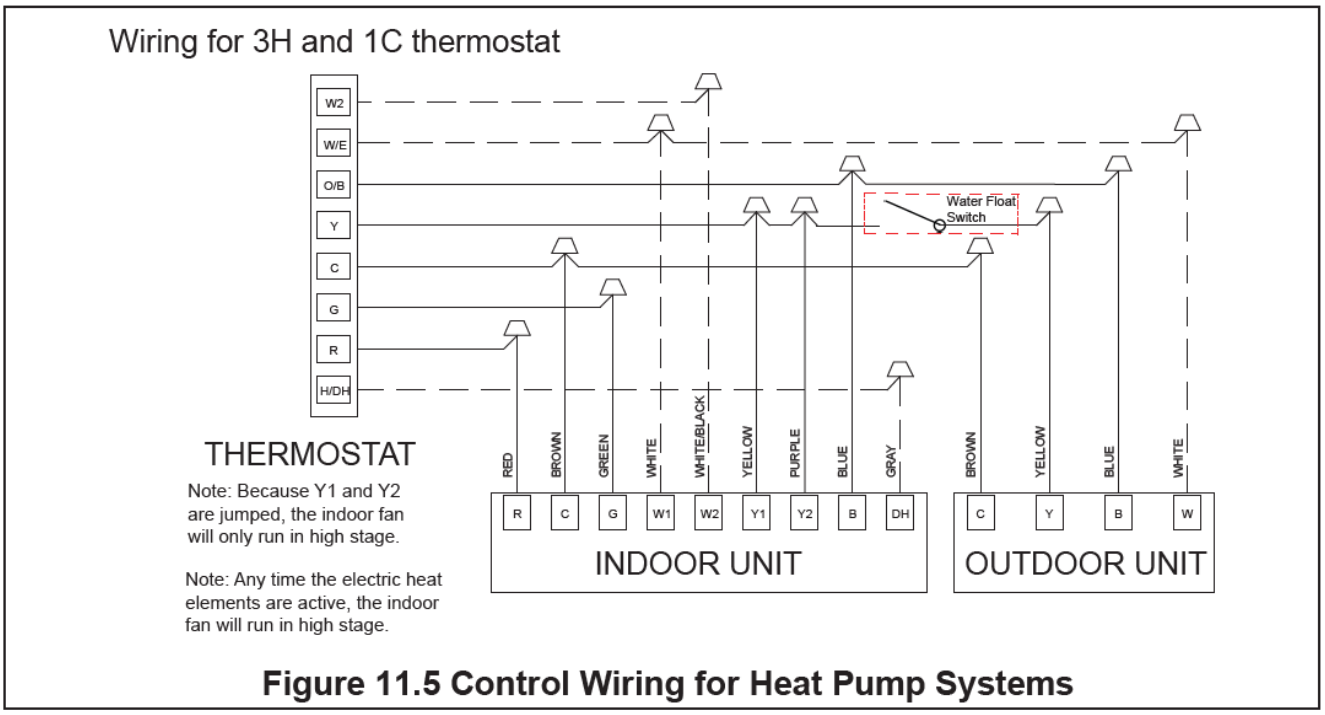

Figure 11.5 Control Wiring for Heat Pump Systems

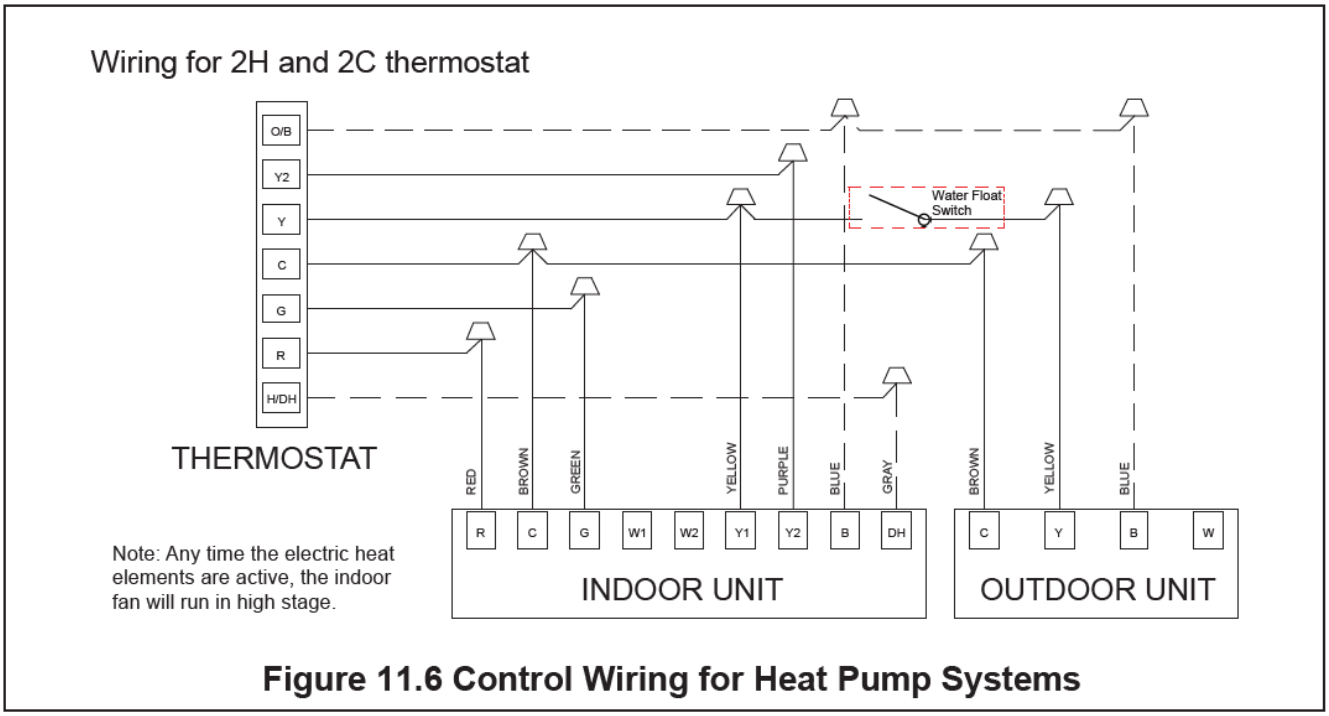

Figure 11.6 Control Wiring for Heat Pump Systems

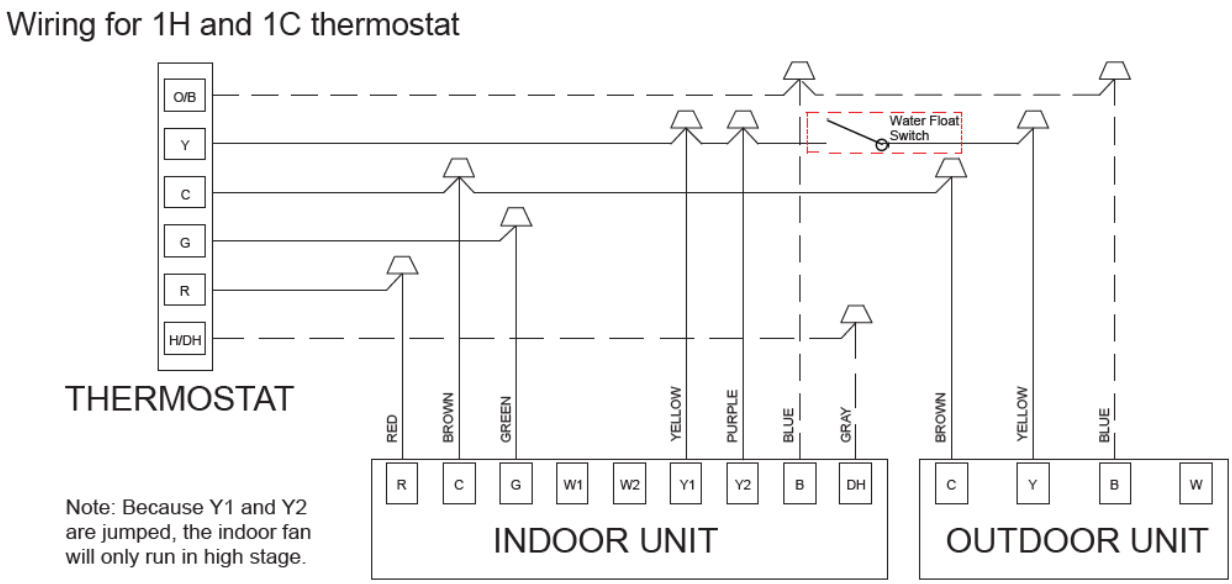

Figure 11.7 Control Wiring for Heat Pump Systems

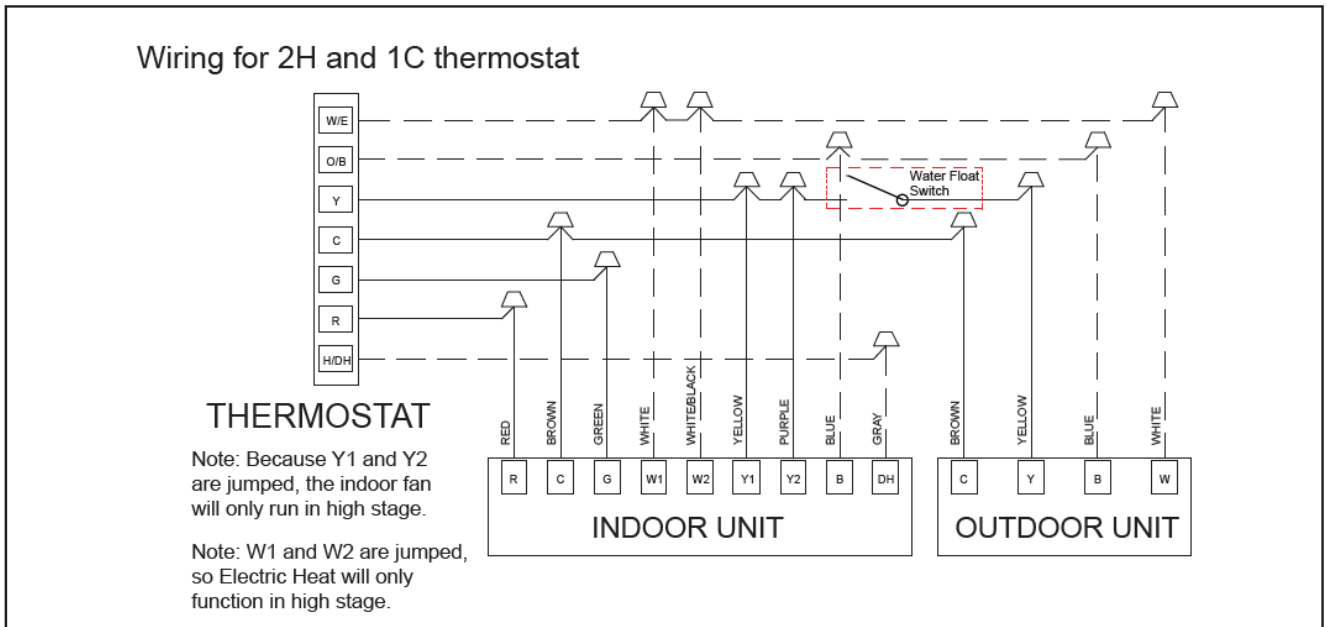

Figure 11.8 Control Wiring for Heat Pump Systems

12. RS485 Communication Wiring

Set the Dial Switch of the Indoor and Outdoor Units to RS485 Communication Mode

Turn the SW1-1 dial switch of the indoor main board and the SW1-1 dial switch on the ODU display board to the On position.

Indoor Unit

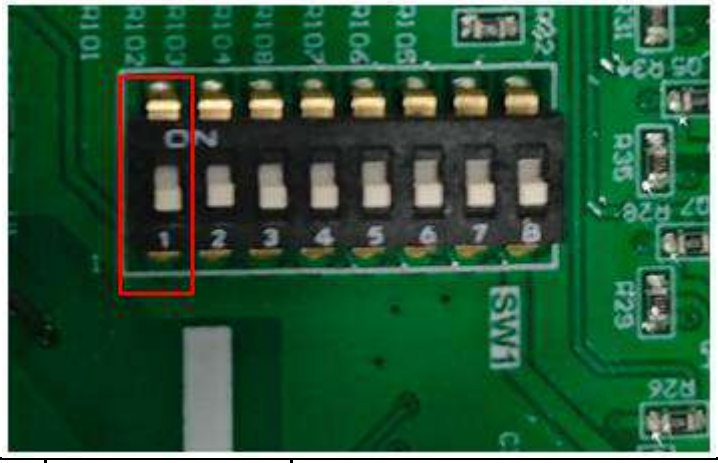

SW1-1	ON	**RS-485 Communication Mode**
	OFF	**24V Control (factory default)**

Outdoor Unit

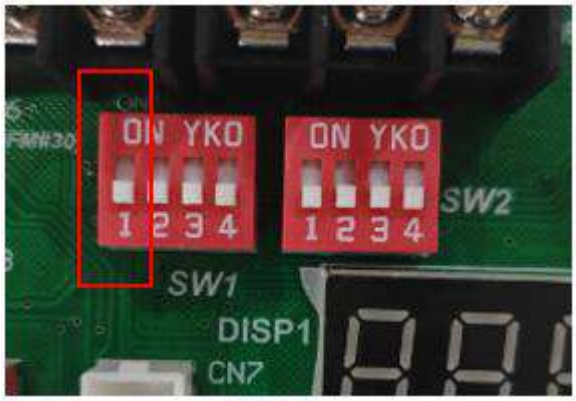

SW1-1	ON	**RS-485 Communication Mode**
	OFF	**24V Control (factory default)**

Connect RS485 Communication Line

Connect the indoor and outdoor units, P-P, Q-Q, E-E one by one, using 2-core shielded wires, with the shielding layer of the cable connected to E.

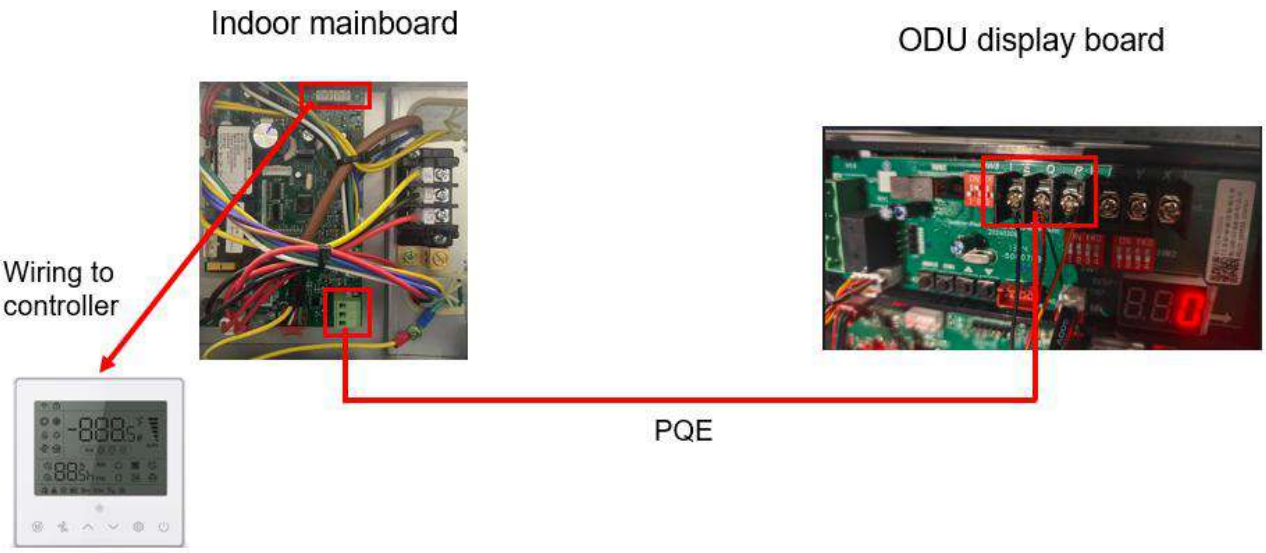

Note: The wired controller communication cable is provided by the factory, and the PQE communication cables for the IDU and ODU needs to be purchased by the customer in the local market.

12V Wire Controller

The 12V wire controller, which is an optional part, is provided by the factory. It is only applicable when the machine is in RS485 communication mode.



	Mode: Set the mode of the air conditioner.
	TEMP+ and TEMP- Set the setpoint of the air conditioner.
	Fan speed: Set different fan speeds of air conditioner.
	On/Off: Start-up and shut-down of air conditioner.
	Function: Set the timing start-up and shutdown, check mode, filter cleaning, and child lock, etc.

Note: For detailed operating instructions, refer to the manual of the wire controller.

13. Water Float Switch Wiring

RS485 Communication Mode:

The indoor and outdoor units connect to 3 communication lines, P.Q.E. The water float switch needs to be connected between the P of the communication line. The indoor unit's communication line of the terminal P first passes through the water float switch and then to the terminal P of the outdoor unit.

Refer to the following figure for wiring information:

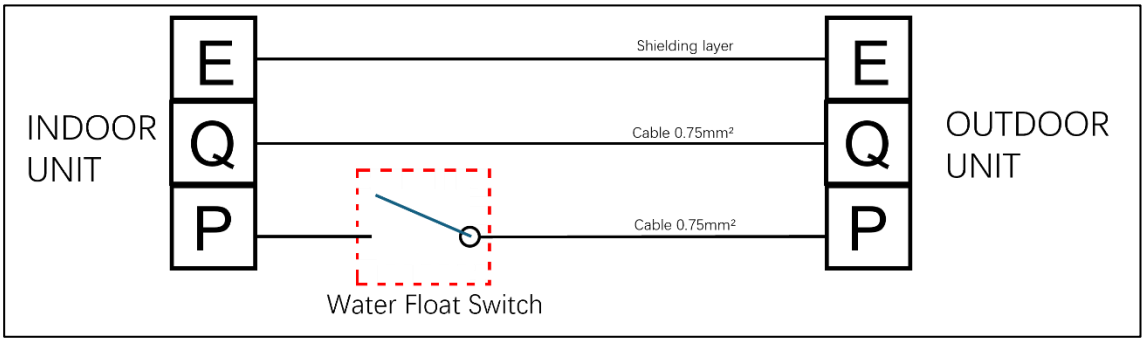

24V Communication Mode:

The indoor and outdoor units connect with R/C/Y/B/G via the 24V thermostat. Begin by connecting the Y signal line of the outdoor unit to the indoor unit. Next connect the indoor unit to the Y terminal of the thermostat. Then connect the water float switch to the Y signal terminal line of the outdoor unit. When the water float switch is overflowing, it will disconnect the Y sign of the outdoor unit, causing the compressor to stop operating.

Refer to the following figure for wiring information:

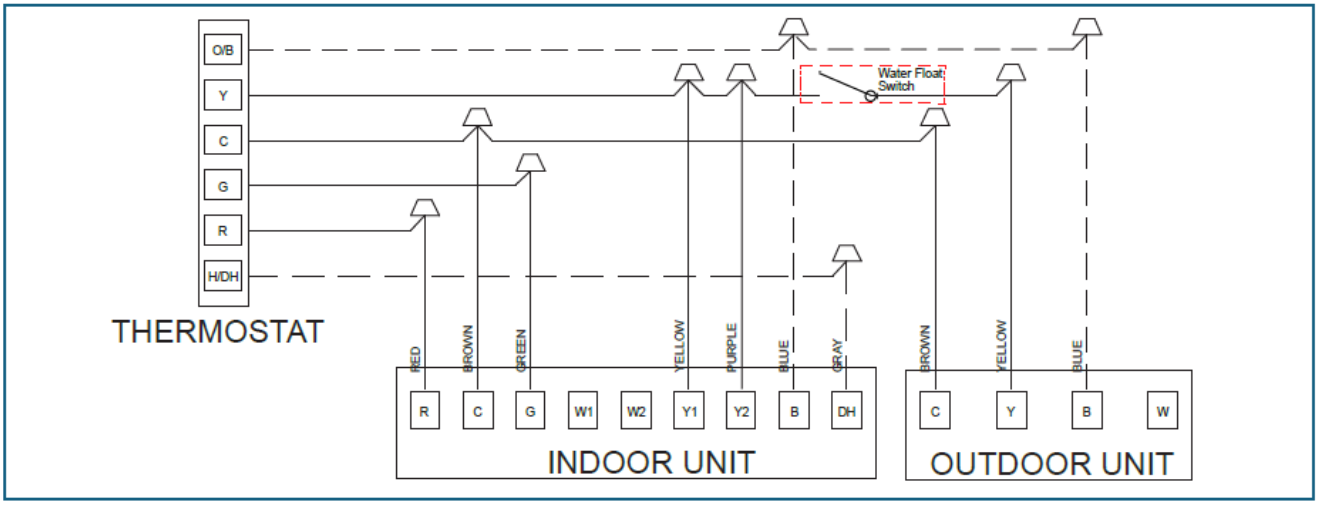

14. Exploded View

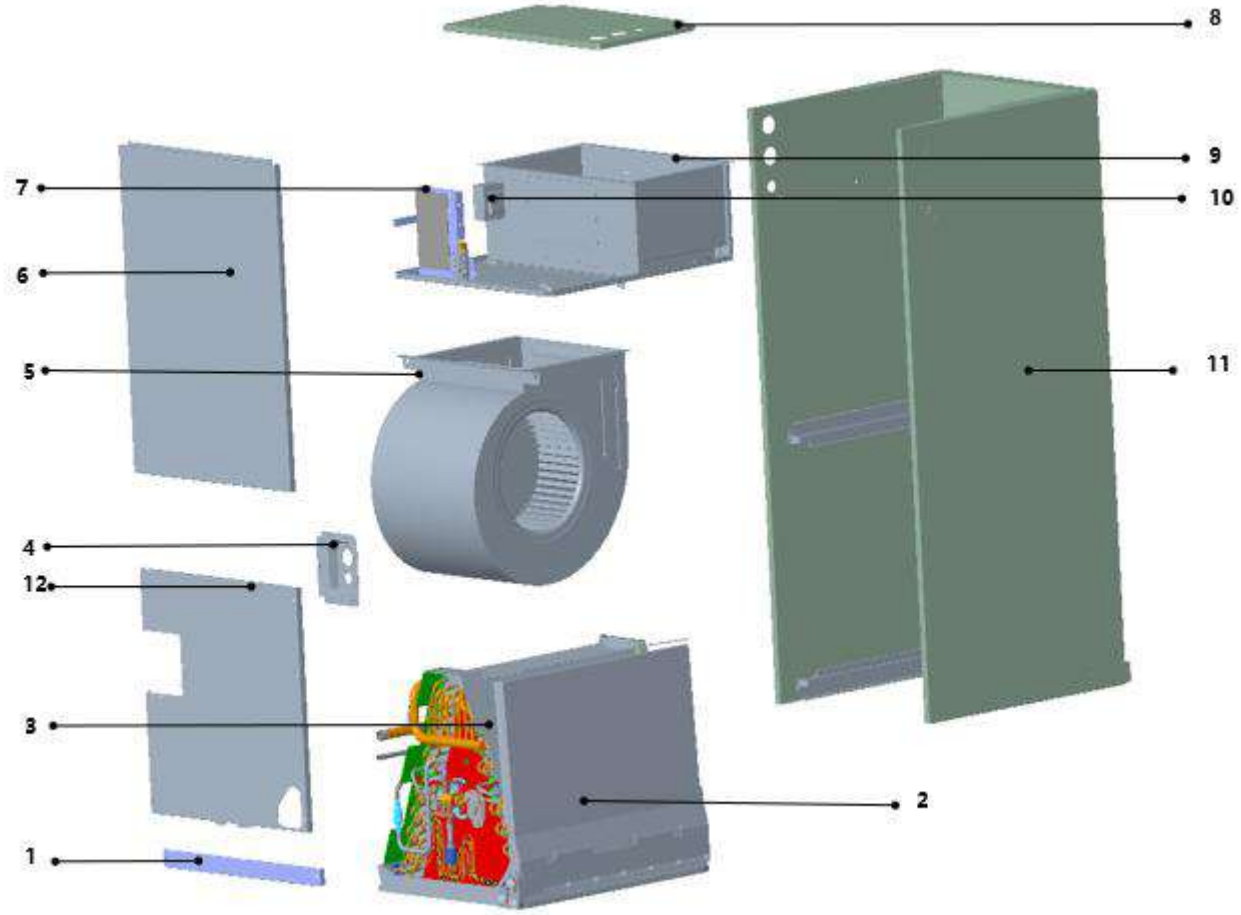

No.	Part Name	Quantity	No.	Part Name	Quantity
1	Filter cover plate	1	**3.10**	Evaporator fixing plate #2	1
2	Water pan components	1	**4**	Pipe cover plate assembly	1
2.1	Water pan #1	1	**5**	Right volute wind wheel	1
2.2	Water pan #2	1	**6**	Upper side plate assembly	1
2.3	Water pan brace	2	**7**	Indoor electrical control box assembly	1
3	Evaporator components	1	**8**	Control box cover assembly	1
3.1	Evaporator output tube assembly	1	**9**	Duct assembly	1
3.2	Evaporator input tube assembly	1	**10**	Transformers	1
3.4	Evaporator baffle	1	**11**	Rear enclosure assembly	1
3.5	Evaporator baffle	1	**12**	Down side plate assembly	1
3.6	Evaporator baffle	1	**13**	Refrigerant leakage sensor	1
3.7	Evaporator baffle	1	**14**	Temperature sensor (T1)	1
3.8	Evaporator baffle	1	**15**	Temperature sensor (T2)	1
3.9	Evaporator fixing plate #1	1	**16**	DC motor	1

Part 3 Outdoor Unit

1. Specification

Model			DYC024GCSI18RD	DYC036GCSI18RD	DYC048GCSI18RD	DYC060GCSI18RD
Electrical Data	Voltage-Phase-Hz	V-Ph-Hz	208/230V-1Ph-60Hz			
	Minimum Circuit Ampacity	A	15	20	25	30
	Max. Overcurrent Protection	A	20	25	35	40
	High / Low Voltage Range	V	187 / 253	187 / 253	187 / 253	187 / 253
Refer to Room Area	Square feet		365～660	536～990	709～1320	835～1650
Compressor	Model		TTM240D43UFTB	TTM240D43UFTB	TTQ440D1UMUA	TTQ440D1UMUA
	Supplier		GMCC	GMCC	GMCC	GMCC
	Type		Twin Rotary	Twin Rotary	Twin Rotary	Twin Rotary
	Hz		18-100	18-100	18-100	18-100
	Capacity	W/h	6700	6700	13000	13000
	Input	W	1805	1805	3650	3650
	Rated Current (RLA)	A	10	12.8	15.8	20
	Refrigerant Oil	ml	920	920	1300cc	1300cc
	Refrigerant Oil Type		POE VG74			
	LRA		52	52	58.1	58.1
Outdoor Motor	Model		S. TB-DQ-DRN-310-200-10	S. TB-DQ-DRN-310-200-10	S. TB-DQ-DRN-310-200-10	S. TB-DQ-DRN-310-200-10
	Brand		board-ocean	board-ocean	board-ocean	board-ocean
	Type		DC	DC	DC	DC
	Power	W	200	200	200	200
	Rated HP	HP	1/4	1/4	1/4	1/4
	Speed	RPM	1100	1100	1100	1100
	FLA (RLA)	A	1.8	1.8	1.8	1.8
Outdoor Fan	Material		Metal			
	Type		Axial Flow			
	Diameter	mm	φ595×115×φ12.7	φ595×115×φ12.7	φ595×115×φ12.7	φ595×115×φ12.7
Outdoor Coil	Number of Rows		2	2	2	2
	Number of U-tubes		28		38	
	Tube Outside Diameter	mm (in)	7 (9/32)	7 (9/32)	7 (9/32)	7 (9/32)
	Fin Spacing / Thickness / Type	mm / mm	1.4 / 0.095 / Hydrophilic Aluminium			
	Length (outside/inside row) *Width *Height	mm	(2136/2076) *26.76 *588		(2136/2073) *26.74 *798	
	Tube Pitch (a) × Row Pitch (b)	mm	13.37 × 21	13.37 × 21	13.37 × 21	13.37 × 21
Outdoor Sound Power		dB(A)	76	79	76	79
Outdoor CFM		CFM	3900	3900	4440	4440
Oudoor Unit	Dimension (W×H×D)	mm	750*635*750		750×835×750	
		in	29-1/8×25×29-1/8		29-1/8×32-7/8×29-1/8	
	Packing (W×H×D)	mm	760×660×760		760×875×760	
		in	30×26×30		30/16×34-4/9×3	
	Net / Gross Weight	kg	62/66	62/66	85/ 89	85/ 89
		lbs	137/146	137/146	187 / 196	187 / 196
Refrigerant System	Liquid Side / Gas Side	in	3/8 / 3/4	3/8 / 3/4	3/8 / 7/8	3/8 / 7/8
	Factory Charge	oz	R454B/116.4	R454B/116.4	R454B/155.2	R454B/155.2
	Metering Device		EEV	EEV	EEV	EEV
	Maximum Line Length	ft	100	100	100	100
	Maximum Elevation Difference	ft	50	50	50	50
Communication Wire		AWG	20	20	20	20
Operating Temperatures	Cooling	°F	5-131	5-131	5-131	5-131
	Heating	°F	-4-86	-4-86	-4-86	-4-86

2. Dimensions

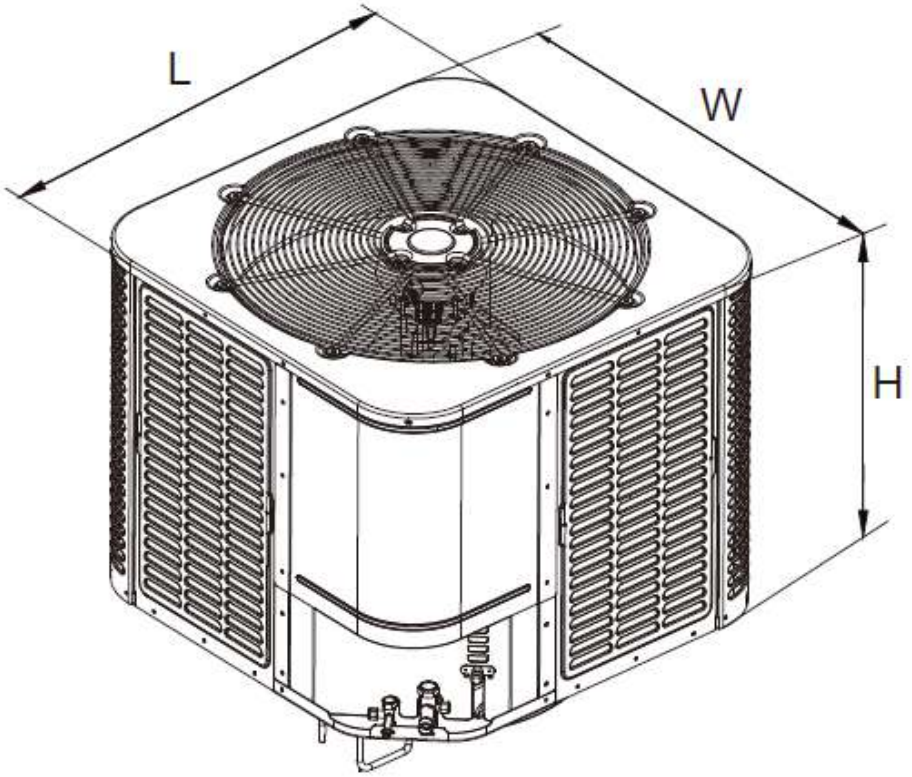

Model	H×W×L (inches/mm)
24K / 36K	25" x 29"-1/8 x 29"-1/8 / 635 x 750 x 750 mm
48K / 60K	32" x 29"-1/8 x 29"-1/8 / 835 x 750 x 750 mm

3. Service Space

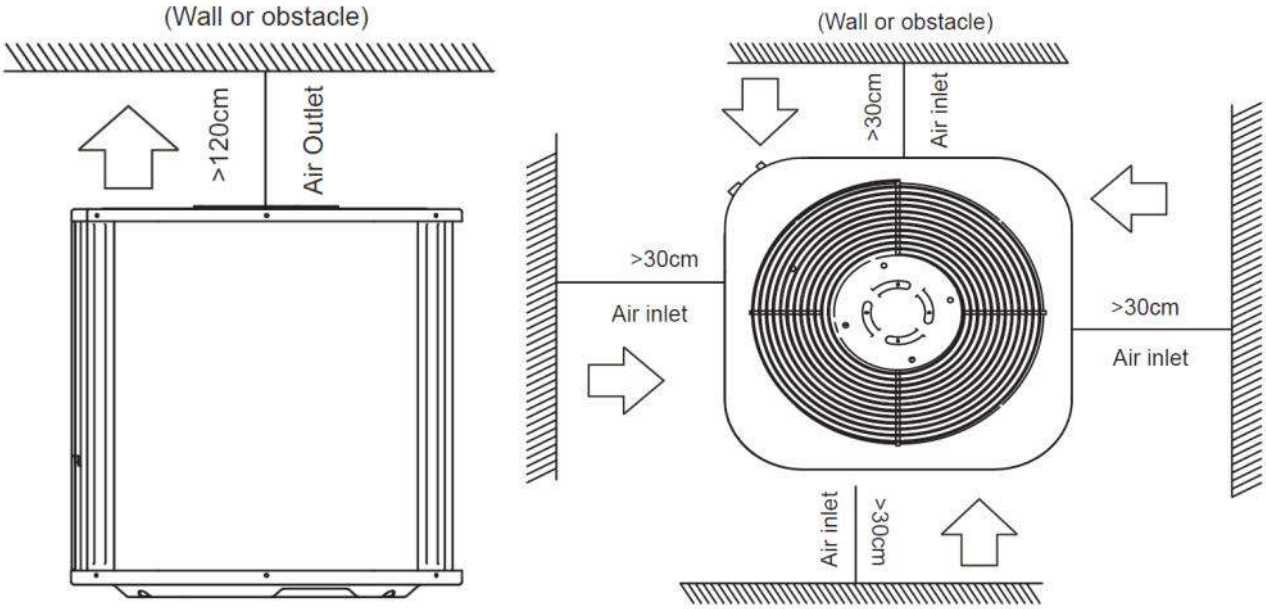

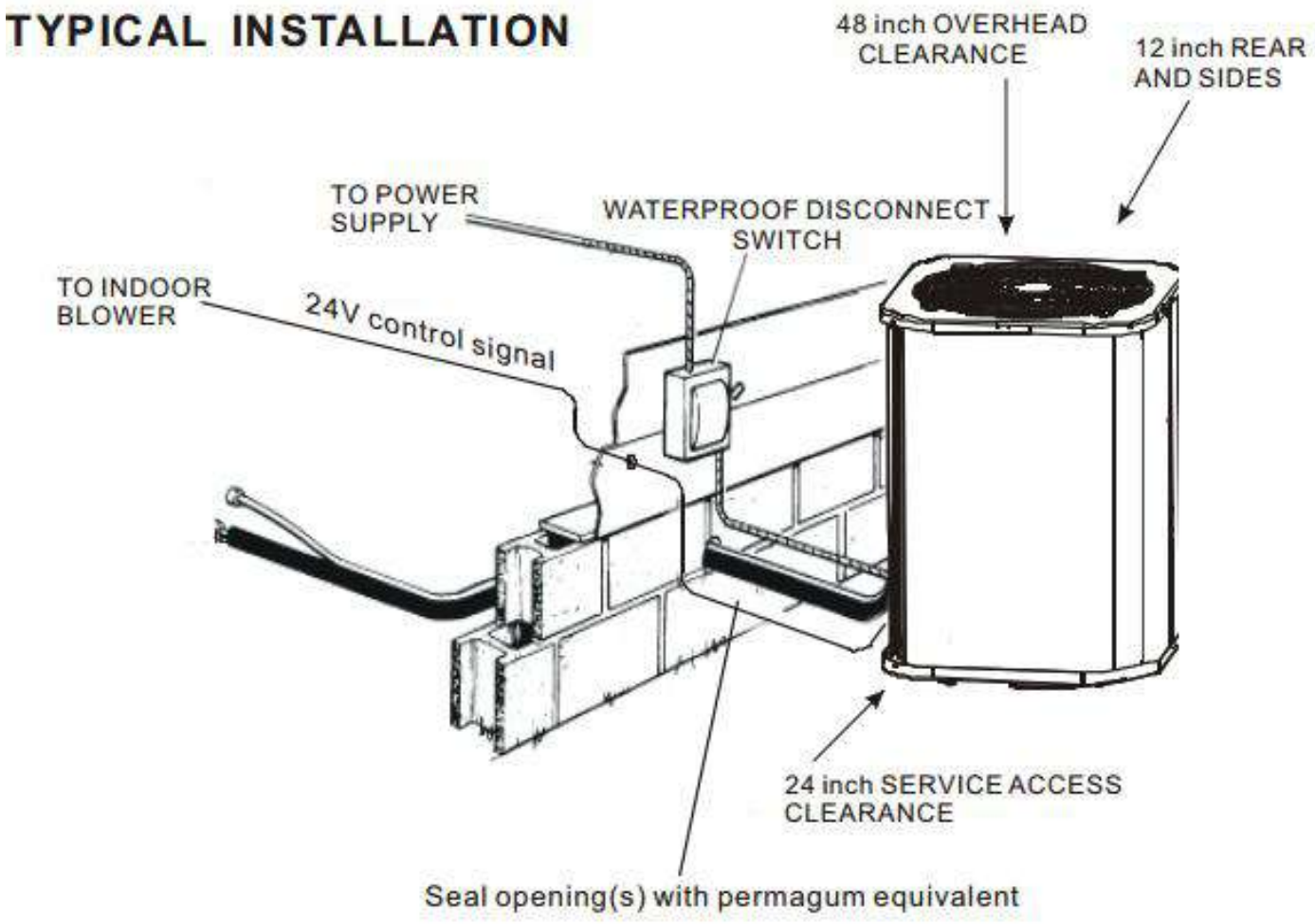

4. Wiring Diagrams

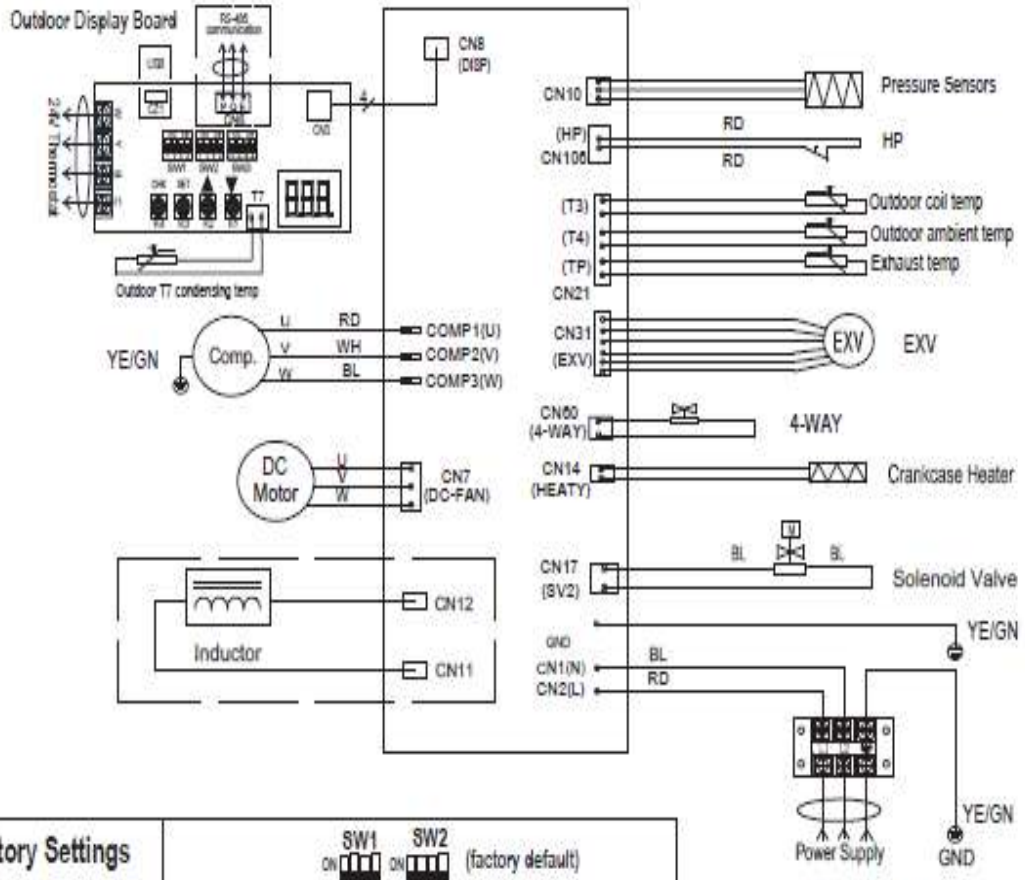

Factory Settings		SW1 ON SW2 ON (factory default)	
MODEL		CHECK	
SW1-1	ON	RS-485 communication mode	
	OFF	24V control (factory default)	
SW1-2	ON	Display unit: ℃ & Mpa	
	OFF	Display unit: ℉ & PSI (factory default)	
SW1-3	ON	System operation mode: Cooling only	
	OFF	System operation mode: Heat pump (factory default)	
SW1-4	ON	USB upgrade	
	OFF	Reserved(factory default)	
SW2-1	ON	Fix timed defrost	Defrosting control mode
	OFF	Auto Defrost (factory default)	
SW2-2	ON	Timer 30 min	
	OFF	Timer 60 min(factory default)	
SW2-3	ON	Powerful defrosting	
	OFF	Normal (factory default)	
SW2-4	ON	Thermostat O/B signal is opposite	
	OFF	Normal (factory default)	
SW3-3	ON	Accelerated cooling	
	OFF	Normally cooling (factory default)	
SW3-4	ON	Accelerated heating	
	OFF	Normally heating (factory default)	

Factory Settings		
SW3-1	SW3-2	MODE
OFF	OFF	24K (2T)
OFF	ON	36K (3T)
ON	OFF	48K (4T)
ON	ON	60K (5T)

WIRE COLOR CODE

RD RED	OR ORANGE	BK BLACK
BR BROWN	BL BLUE	GN GREEN
PR PURPLE	WH WHITE	GY GREY
YE YELLOW		

WIRE INFORMATION

——— FACTORY CONNECTION
—··—··— PROJECT CONNECTION
——— PRACTICALITY EXTERIOR
— — — · DASHED CIRCLE(Optional)

NOTE 1: — — — —

The wiring diagram is for explanation purpose only and the actual shape of the components may be different.

5. Electrical Characteristics

Model	Outdoor Unit					
	Hz	Voltage	Min.	Max.	MCA	MOP
24K	60	208~230V	187V	253V	15.0	20.0
36K	60	208~230V	187V	253V	20.0	25.0
48K	60	208~230V	187V	253V	25.0	30.0
60K	60	208~230V	187V	253V	30.0	40.0

6. Operation Limits

Operation Mode	Outdoor Temperature (°F/°C)	Room Temperature (°F/°C)
Cooling	5–131°F / -15-55°C	61–90°F / 16-32°C
Heating	-4–86°F / -20-30°C	61–90°F / 16-32°C

7. Sound Levels

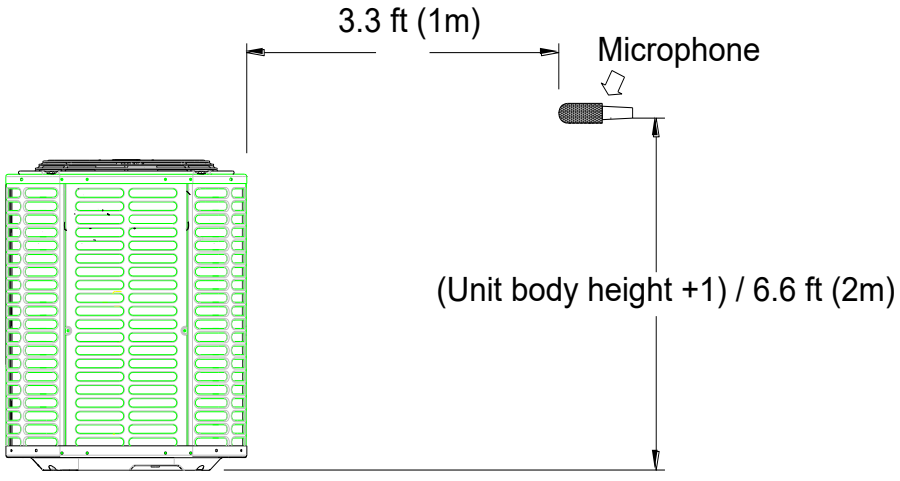

Note: The sound level is measured 3.3 ft (1m) in front of the unit and at a height of 6.6 ft (2m) (unit body height +1).

8. Exploded View

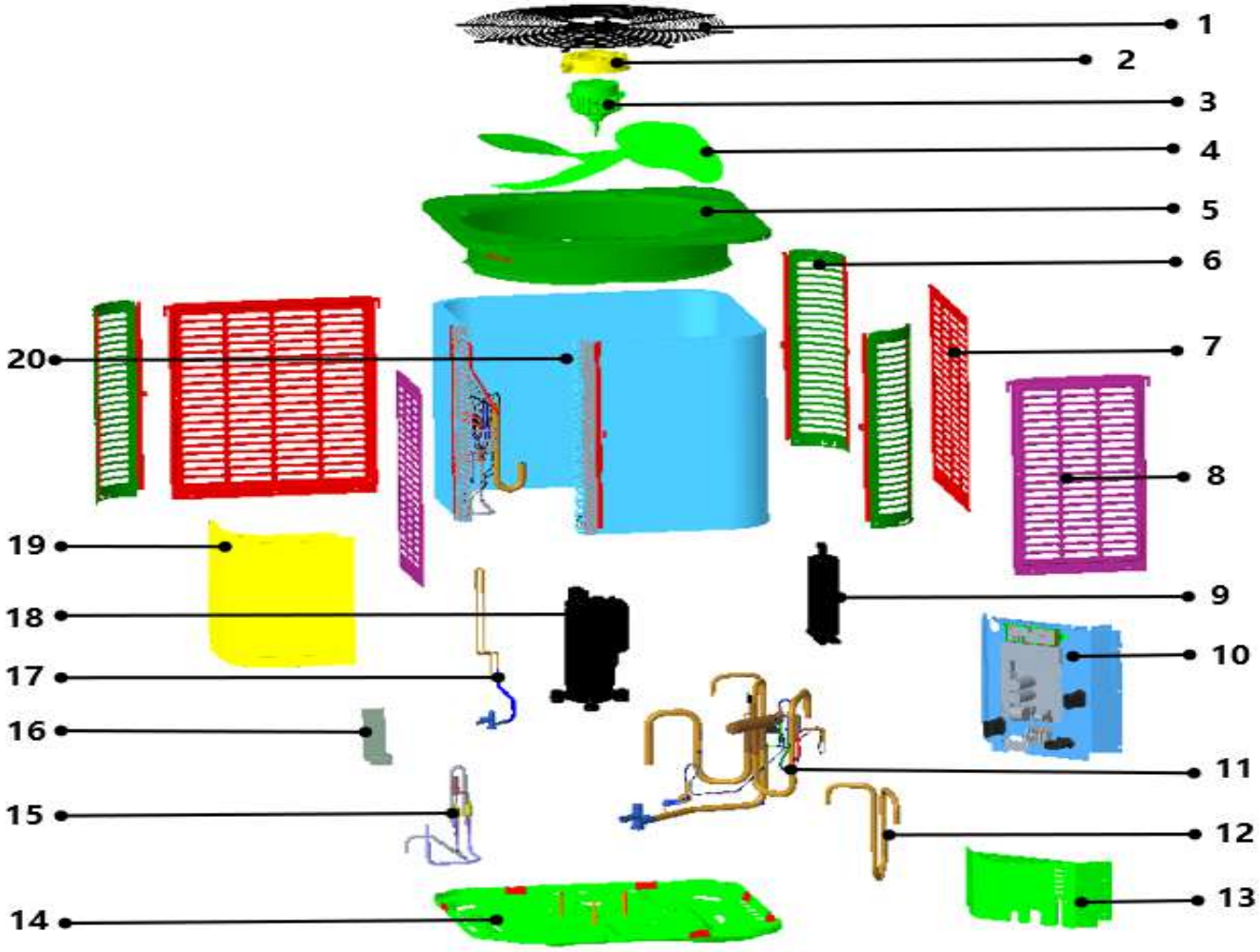

No.	Part Name	Quantity	No.	Part Name	Quantity
1	Cover net	1	**12**	Suction air pipe weld assembly	1
2	DC motor mount	1	**13**	Bottom side panel	1
3	Outdoor motor	1	**14**	Chassis assembly	1
4	Axial-flow fan	1	**15**	Electronic Expansion Valve (EEV) assemblies	1
5	Top cover assembly	1	**16**	Valve support plate	1
6	Support board	3	**17**	High pressure valve assembly	1
7	Rear side panel	2	**18**	Compressor	1
8	Right side panel	2	**19**	Top panel	1
9	Gas-liquid separator	1	**20**	Condenser assembly	1
10	Electronic control board	1	**21**	Temperature sensor (T7)	1
10.1	Main control board	1	**22**	Pressure sensor	1
10.2	Display board	1	**23**	Temperature sensor group (T3/T4/T5)	1
11	4-way valve welding assembly	1	**24**	High pressure switch	1

9. Troubleshooting

Display Board Button

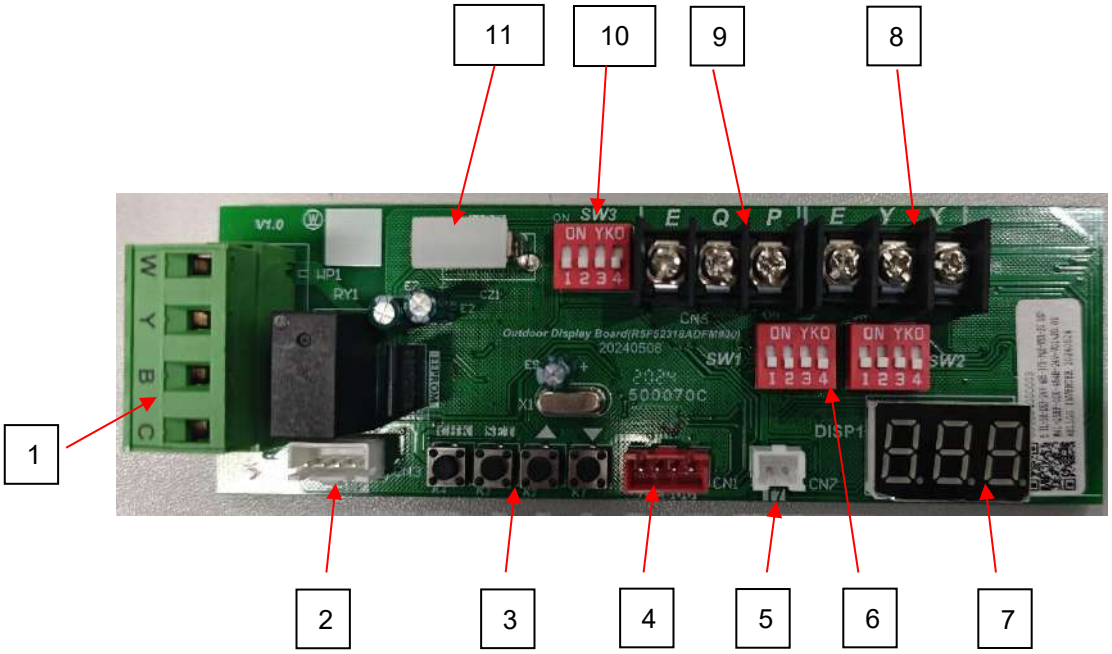

No.	Port Definition	Description
1	24V communication interface	Connected to 24V thermostat
2	Communication port with mainboard	Communicate with the main control board
3	Function buttons	View parameters, adjust parameters, select functions, etc.
4	Reserve ports	Reserve
5	T7 sensor port	Detect the outlet temperature of the condenser
6	SW2 and SW3 dialing	Adjusting function parameters through dialing
7	Display screen	Display parameter information or fault codes
8	Reserve ports	Reserve
9	PQE communication with indoor unit	Only effective in RS485 communication mode
10	SW1 dialing	Adjusting function parameters through dialing
11	USB debug port	Can be used to update the main control board program

Parameter Spot Check Table

To display system parameters, press the "Check (K4)" button to index through the series of parameters available. The first time you press the "Check" button, it will display the sequence, and after 1s it will display the value of the parameter. If you press the "Check" button again, it will display the next sequence.

- Refer to the picture below for the location of the "Check" button on the display board.

▲: Check button, and set the parameter "+"

▼: Check button, and set the parameter "-"

After 20s on the same parameter, the display will revert back to normal status.

Check Table			
No.	**Display Content**	**20**	AC current (A; Actual value)
00	Outdoor mode (0: Standby mode / 2: Cooling mode / 3: Heating mode)	**21**	Compressor current
01	Outdoor power (model)	**22**	Oil output (CC; Actual value)
02	Running mode (0: Standby mode / 2: Cooling mode / 3: Heating mode)	**23**	T1 indoor ambient temp. (°F; Actual value)
03	Target frequency (Hz; Actual value)	**24**	T2 indoor evaporator temp. (° F; Actual value)
04	Actual frequency (Hz; Actual value)	**25**	Concentration value
05	Running frequency (Hz; Actual value)	**26**	Enter PI control sign (0 or 1)
06	T3 condensing temp. (°F; Actual value)	**27**	Enter defrosting type
07	T4 outdoor ambient temp. (°F; Actual value)	**28**	Test mode (1-40; Mode gear)
08	T5 exhaust temp. (°F; Actual value)	**29**	Frequency increase (Shift; Actual value)
09	Temp. transform by pressure sensor (°F; Actual value)	**30**	△EV (Step; Actual value)
10	IPM modular temp. (°F; Actual value)	**31**	PFC control state
11	Target temp. Tes / Tcs (°F; Actual value)	**32**	Frequency limit item
12	Discharge temp. superheat (°F; Actual value)	**33**	Driving failure code subdivision 1
13	Target superheat (°F; Actual value)	**34**	Driving failure code subdivision 2
14	Fan speed (Actual value / 10)	**35**	Last failure or protection code
15	EXV opening degree (Step; Actual value)	**36**	Software version number (1-255)
16	Pressure value (PSI; Actual value * 25)	**37**	T7 condensing temp. (°F; Actual value)
17	Pressure valve transform by T3 (PSI; Actual value * 25)	**38**	T30 temp. (°F; Actual value)
18	AC voltage (VAC; Actual value)	**39**	Compression ratio
19	DC voltage (VDC; Actual value)		

Error Code Tables

Outdoor Unit

Code	Failure or Protection Definition	Code	Failure or Protection Definition
E1	Communication error (indoor unit)	**P7**	T2 freeze protection
E2	T1 sensor error	**P8**	IPM high temp. protection (Ft)
E3	T2 sensor error	**P9**	DC fan motor error
E4	Indoor refrigerant sensor detecting leakage error	**PC**	Wet operation error
E6	Refrigerant leakage error	**PD**	High pressure abnormal error (Heating mode)
E7	EEPROM failure (indoor unit)	**H0**	Communication fault of the master board and driver chip
E8	Fan motor error (indoor unit)	**H1**	T3 sensor high temp. error (Cooling mode) (3 times P5 error within 180 min)
E9	Communication fault of smart control	**H2**	High pressure switch error (3 times P1 error within 150 min)
F0	Communication failure (outdoor unit)	**H3**	High pressure abnormal (Heating mode) (3 times PD error within 180 min)
F4	T4 outdoor ambient temp. sensor error	**H4**	IPM modular high temp. error (3 times P8 within 120 min)
F5	T5 exhaust temp. sensor error	**H5**	Low pressure error (5 times P2 within 240 min)
F6	T3 condensing temp. sensor error	**H6**	Discharge temp. abnormal error (3 times P4 within 100 mins)
F7	T7 temp. sensor error	**H7**	Wet operation error (3 times PC within 200 min)
F8	T7 temp. sensor error in detecting condensation risks	**H8**	T3 condenser sensor disconnect error (3 times FE within 120 min)
F9	AC over-voltage / under-voltage protection	**HC**	Discharge temp. sensor disconnect error (3 times FE within 180 min)
FA	EEPROM failure (outdoor unit)	**HE**	Condensate error (3 times within 60 min)
FB	EEPROM failure of the driver chip	**L0**	DC cable bus low-voltage protection
FC	IPM modular sensor error	**L1**	DC cable bus high-voltage protection
FD	HLP pressure sensor failure	**LA**	Frequency limitation by voltage
FE	T3 or T5 sensor disconnect error	**LB**	Frequency limitation or decline by high pressure
FF	HPS condenser sensor disconnected	**LC**	Frequency limitation by condenser temp.
P1	High pressure switch error	**LD**	Frequency limitation by discharge temp.
P2	Low pressure protection	**LE**	Frequency limitation by IPM modular high temp.
P3	Inverter overcurrent protection	**LF**	Frequency limitation by current
P4	T5 exhaust temp. sensor high temp. protection	**d0**	Oil return mode
P5	T3 condenser sensor high temp. protection (Cooling mode)	**df**	Defrost mode
P6	IPM protection	**dC**	Force Cooling mode
		ATL	Overtemperature protection

Indoor unit

Number of Green Light Flashes	Fault Description
2	T1 sensor fault
3	T2 sensor fault
4	Refrigerant concentration sensor fault
5	Refrigerant leakage
6	Anti-freeze protection
7	Mainboard chip fault
8	Motor protection
9	IDU and ODU unit communication fault (RS485 communication mode)
10	Wire controller communication fault (RS485 communication mode)

Part 4 Function Introduction

1. Electrical Components Description

Temperature Sensor
T1: IDU Ambient Temperature
— Capacity demand control (R485 mode)
— Defrost control (Heating mode)

T2: Indoor Coil Temperature
— Anti-cold air function (Heating mode)
— Anti-freezing function

T3: Outdoor Coil Temperature
— High/Low temperature protection
— Outdoor fan control (Cooling mode)
— Defrost control (Heating mode)

T4: ODU Ambient Temperature
— Operating condition permission
— Defrosting condition (Heating mode)
— Outdoor fan control (Heating mode)

T5: Compressor Discharge Temperature
— High temperature / Low superheat protection
— Electronic Expansion Valve (EEV) control

Tfin: Inverter Board Heat Sink Temperature Sensor
— Protection against overheating of the inverter board

T7: Control board Heat Pipe Temperature
— Control board anti-condensed

Pressure Transducer:
Evaporating pressure in Cooling mode and condensing pressure in Heating mode.
— Compressor frequency control
— Electronic Expansion Valve (EEV) control
— High pressure protection (Heating mode)
— Low pressure protection (Cooling mode)

Pressure Equalizer Value (PEV
— Used to balance the pressure in the system before the compressor starts.

Reversing value operation
— Reversing value energizes during Heating mode and de-energizes in Cooling mode.

Compressor Crankcase Heater Description
— Refrigerant migration during the Off cycle can result in noisy start-ups, therefore a Crankcase Heater (CCH) is used to minimize refrigeration migration. This will minimize start-up noise and/or bearing "wash out."
All CCHs must be installed around the lower half of the compressor shell. This helps warm the compressor during the Off cycle, driving refrigerant from the compressor. After extended shutdown periods in cold weather, it is recommended to allow the CCH to be energized for at least 12 hours prior to compressor operation by applying line voltage to the heat pump with the thermostat off.

CCH Operation Energizes:
First time line voltage is applied and the compressor discharge temperature is T5 < 73.4°F(23°C). The compressor stops running for 3 hours (outdoor ambient temperature T4 < 50°F(10°C) or T5 < 73.4°F(23°C).

CCH Operation De-energizes:
Compressor discharge temperature T5 > 82°F(27.8°C).

2. Control Logic Description

The variable speed system is applicable with the same 24V thermostat control as any conventional heat pump.

The compressor's speed is controlled based on coil pressures, which is monitored by the unit's pressure transducer and various temperature sensors. To ensure stable and adequate capacity, the compressor speed will modulate relative to the evaporator pressure during Cooling mode and the condensing pressure during Heating mode.

After the system starts and enters a stable operating stage, the system software will continuously be monitored by the sensor input and adjust the compressor speed adaptively, so that it can provide enough stable output capacity.

3. Anti-Cold Air & Heating Fan Delay Function

Anti-Cold Air Function (Only effective in Heating mode)

When the SW1-2 is in the Off position and running in Heating mode, the fan will not start when the coil temperature (T2) < 82.4°F(28°C)

When T2 > 82.4°F(28°C), the fan will start immediately. When the electrical heat kit is manually turned on, the fan will also start immediately.

Heating Fan Delay Function

When the dip switch SW1-2 is set to the On position and the indoor unit is in Heating mode, the fan will operate with a 90s delay each time it starts. The fan speed is determined by the Y1/Y2 signal from the thermostat.

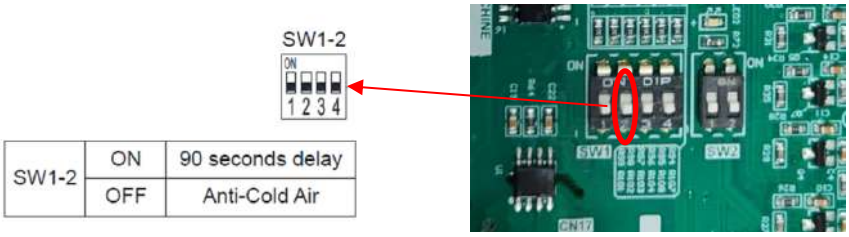

SW1-2	ON	90 seconds delay
	OFF	Anti-Cold Air

4. Indoor Coil Anti-Freezing Function

This function utilizes the indoor coil sensor (T2) to determine whether the indoor coil is freezing or not. This feature prevents the unit from running at low evaporating temperatures, as well as low suction superheat.

When all the following conditions are met, the Anti-freezing function will activate and the compressor will turn off:

1) T2 < 32°F(0°C) duration exceeding 1 min.
2) T2 ≤ 26.6°F(-3°C) duration exceeding 30s
3) When T2 ≥ 42.8°F(6°C), the Anti-freezing function will deactivate.

5. R454B Leakage Detection Function

This function utilizes a R454B refrigerant sensor to detect the R454B concentration. The terminal F/L2 is reserved for connecting the buzzer if needed.

When R454B leakage occurs in the indoor coil and the concentration is above 10% LEF, the unit will perform as the following:

1) Cut off the power to the thermostat to stop the operation of the compressor.
2) The electrical heat kit will be turned off.
3) High voltage will be output between the terminal F and terminal L2.
4) The indoor fan is running at high wind speed. At the same time, the fault light on the indoor control board is flashing.

6. Accelerated Operation Mode

Through manually adjusting the target outdoor coil temperature setting (SW3-3&4), you can achieve improved cooling and capacity demands.



	SW3-3	SW3-4
On	Accelerated cooling	Accelerated heating
Off	Normally cooling (factory default)	Normally cooling (factory default)

The Accelerated Cooling / Heating function changes the initial target coil temperature to provide "enhanced comfort" by increasing the unit capacity.

In the Accelerated mode, the unit sets the target evaporation temperature to ±41°F(5°C). This provides a higher or lower target evaporation temperature or condensation temperature than normal mode, improving the cooling or heating effects. The compressor frequency is still adjusted by variable frequency.

7. Defrost Description

According to the actual situation on the site, the unit has multiple defrost modes to choose from:

Auto Defrost

The unit measures the ambient temperature and the temperature of the outdoor coil through sensors, calculating the condensation pressure and unit running time to determine whether to enter Defrost mode. When the temperature of the coil exceeds the set value, the unit automatically exits Defrosting mode.

Manual Forced Defrosting Mode

Press the "▼" button on the display board for about 5s to enter manual defrost. The LED display will show "dF" (shows the frequency of the compressor in Hz).

1) Manual defrosting can only be engaged after 5 min of operation following the system being powered on for the first time. Also the system must operate in Heating mode.
2) The system will exit manual defrosting by the same condition of the normal defrosting cycles.
3) After the manual defrosting cycle finishes, the system will return to the previous operation mode.

Fixed-Time Defrosting

You can activate the Defrost function every 30-60 min. When the temperature of the coil exceeds the set value, the unit automatically exits Defrosting mode.

Powerful Defrosting

Heating operation time is reduced by 10% and defrosting extends for 60s.

Defrosting Choice	SW2-1	SW2-2	SW2-3
On	Fix-timed defrost	Timer 30 min	Powerful defrosting
Off	Auto Defrost (factory default)	Timer 60 min (factory default)	Normal (factory default)
Remark	Defrosting: Control mode selection	Cycle time selection	Only applicable to fix-timed defrosting timer and the minimum runtime timer.

If the SW2-1 is on, the fixed defrost time is determined by the SW2-2 dial selection.

8. Forced Operating Mode

Forced Cooling Mode: Press and hold the "K3" button on the display board for 5s to enter Forced Cooling mode. The LED display will show "dC".

Forced Heating Mode: Press and hold the "▲" button on the display board for 5s to enter Forced Heating mode. The LED display will show "dH".

9. Use the USB to Update the ODU Program

The USB can be used on the display board to update the main control program. The USB is used in conjunction with the SW1-4.

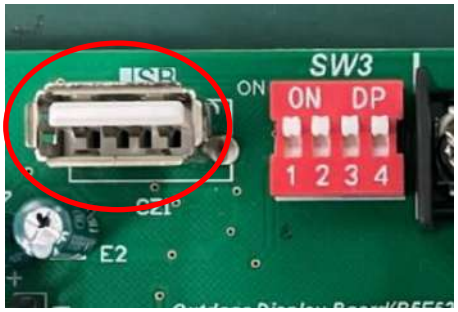

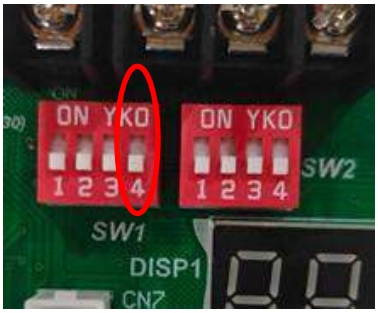

Operation Steps:

1) Power off the unit.
2) Switch the SW1-4 to the On position.
3) Insert the USB flash drive.
4) Power on the unit. The display board will show No. 1.
5) Switch the SW1-4 to the Off position. The display board will show No. 2.
6) Subsequently, the display board will show No. 3, indicating that it is burning.
7) The display board will show No. 888 to indicate the program was successfully burned and entered normal operation.
8) Unplug the USB drive.

10. Capacity Model Selection

The system software will recall performance setting parameters according to the DIP switch selection. Set the DIP according to the matched IDU.

	**SW3-1**	**SW3-2**	**Remark**
2 Ton mode	Off	Off	
3 Ton mode	Off	On	Factory Default
4 Ton mode	On	Off	
5 Ton mode	On	On	Factory Default

Part 5 Installation

1. Installation Precautions

1) Measure the Pipe Length

- Measure the necessary length of the connecting pipe.
- Connect the indoor unit first, then the outdoor unit.
- Properly bend the tubing.

Refer to the table below for the length dimensions of the connection pipe.

Refrigerant line		Capacity (Kbtu/h)			
		24K	36K	48K	60K
Liquid suction	In.	3/8-3/4	3/8-3/4	3/8-7/8	3/8-7/8
Max.Refrigerant Line Length*	Ft.	100			
Max.Elevation* Vertical Lift**	Ft.	50			

Caution:
Smear the surfaces of the flare pipe and joint nuts with frozen oil. Wrench it for 3-4 rounds by hand before fastening the flare nuts.
When connecting or disconnecting the pipes, use 2 wrenches simultaneously.

Pipe Gauge	Tightening Torque	Flare Dimension A (mm) Min	Max	Flare Shape
Φ6.35	15～16N.m (153～163 kgf.cm)	8.3	8.7	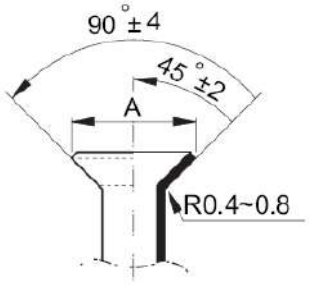
Φ9.52	25～26N.m (255～265kgf.cm)	12.0	12.4	
Φ12.7	35～36N.m (357～367kgf.cm)	15.4	15.8	
Φ15.9	45～47N.m (459～480 kgf.cm)	18.6	19.1	
Φ19.1	65～67N.m (663～684kgf.cm)	22.9	23.3	

Firmly close the stop value of the outdoor unit (as the original state). Every time you connect it, begin by loosening the nuts at the stop value. Then connect the flare pipe within 5 min. If the nuts have been loosened for a long time, dust and other impurities may enter the pipe system, potentially causing malfunctions. Expel the air out of the pipe with refrigerant before connection. Expel the air after connecting the refrigerant pipe with the indoor and outdoor units. Then fasten the nuts at the repair-points.

2) Locate the Pipe

Drill a hole in the wall (suitable for the size of the wall conduit). Then set on the fittings, such as the wall conduit and its cover. Bind the connecting pipe and cables together tightly with binding tapes. Do not let air in, which will cause water leakage by condensation. Pass the bound connecting pipe through the wall conduit from outside. Ensure the pipe allocation does not damage the tubing.

3) Connect the pipes.

4) Open the stems of the outdoor unit's stop values to put the refrigerant pipe connecting the indoor unit with the outdoor unit in fluent flow.

5) Confirm there is no leakage by checking it with a leak detector or soap water.

6) Cover the joint of the connecting pipe to the indoor unit with the soundproof / insulating sheath (fittings). Bind it well with the tapes to prevent leakage.

2. Oil Return Bend Installation

Note: The length of the connecting line from the outdoor unit to the indoor unit cannot exceed 100 ft (30.5m).

- If all long lines are in a horizontal state, no additional actions are required.
- If there is a vertical height difference in the long line, it needs to be installed according to the following requirements:
  - When the vertical height difference is 0 < h ≤ 16.5 ft (5m), no additional actions are required.
  - When the vertical height difference is 16.5 ft (5m) < h ≤ 33 ft (10.1m), an oil return bend needs to be added in the middle of the height difference.
  - When the vertical height difference is 33 ft (10.1m) < h ≤ 50 ft (15.2m), two oil return bends need to be added at an equal distance in the height difference.

Note: The vertical height difference between the outdoor unit and the indoor unit cannot exceed 50 ft (15.2m)
The following is the connection method of the oil return bend:

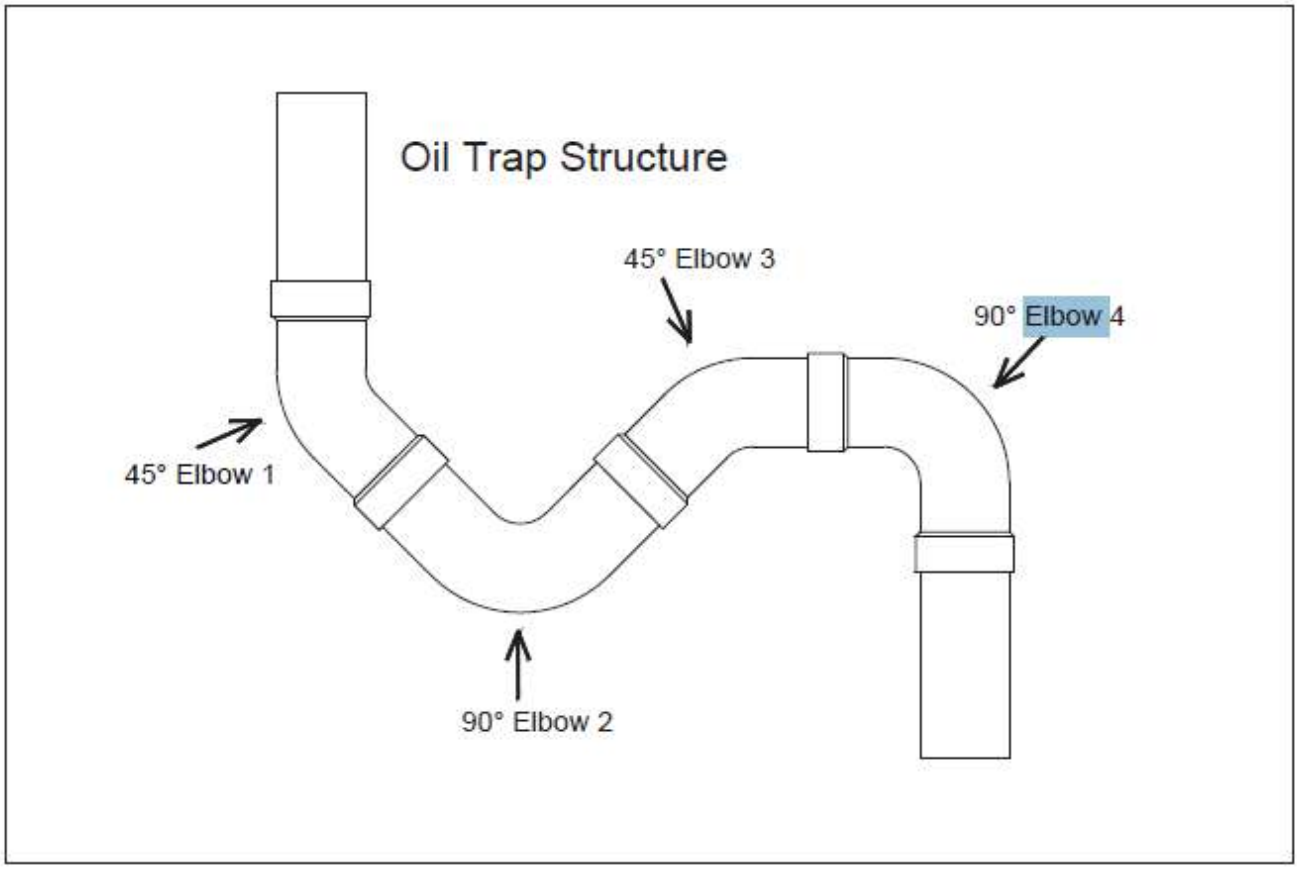

3.Vacuum Dry & Leakage Checking

3.1 Vacuum Dry

Use the vacuum pump to change the moisture (liquid) into steam (gas) in the pipe and discharge it out of the pipe to make the pipe dry. Under one atmospheric pressure, the boiling point of water (steam temperature) is 212°F(100°C). Use the vacuum pump to make the pressure in the pipe near the vacuum state, causing the boiling point of water to fall relatively. When it falls under the outdoor temperature, the moisture in the pipe will be vaporized.

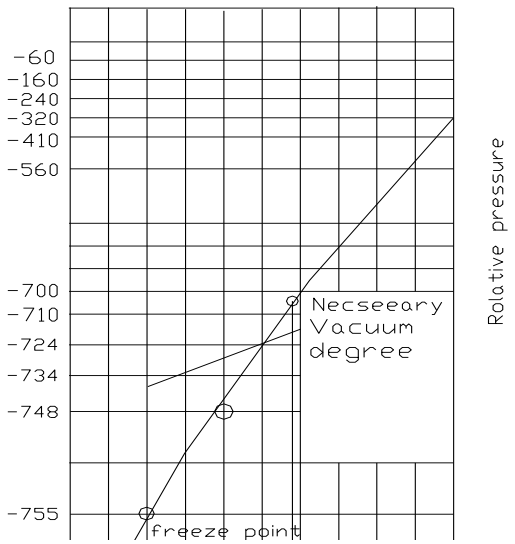

3.2 Vacuum Dry Procedure

There are 2 vacuum dry methods due to different construction environments: common vacuum dry and special vacuum dry.

Common Vacuum Dry Procedure

Vacuum dry for the first time. Connect the all-purpose detector to the inlet of the liquid pipe and gas pipe. Then run the vacuum pump more than 2 hours. The vacuum pump must be below -755mmHg.

If the pump can't achieve below -755mmHg after pumping for 2 hours, moisture or leakage may still exist in the pipe. At this time, pump 1 hour more.

If the pump can't achieve -755mmHg after pumping for 3 hours, check if there are some leakage points.

Vacuum placement test: Place 1 hour when it achieves -755mmHg. Pass if the vacuum watch shows no rising. If it rises, it shows there's moisture or leakage points. Vacuum the liquid pipe and gas pipe at the same time.

There is a sketch map of the common vacuum dry procedure below:

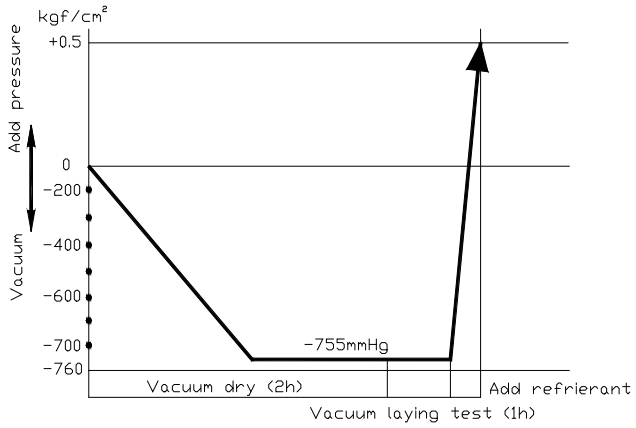

Special Vacuum Dry Procedure

1) Vacuum dry for the first time for 2h pumping.
2) Fill nitrogen to 0.5Kgf/cm2. **Note**: Because nitrogen is for drying gas, it has a vacuum drying effect during vacuum destroy. However, if the moisture is too much, this method cannot dry thoroughly. Pay attention to prevent water from entering and forming condensation water.
3) Vacuum dry for the second time for 1h pumping. **Note**: If -755mmHg can't be achieved in 2h, repeat steps 2 and 3.
4) Vacuum placing test (1h).
5) Sketch map of special vacuum dry procedure.

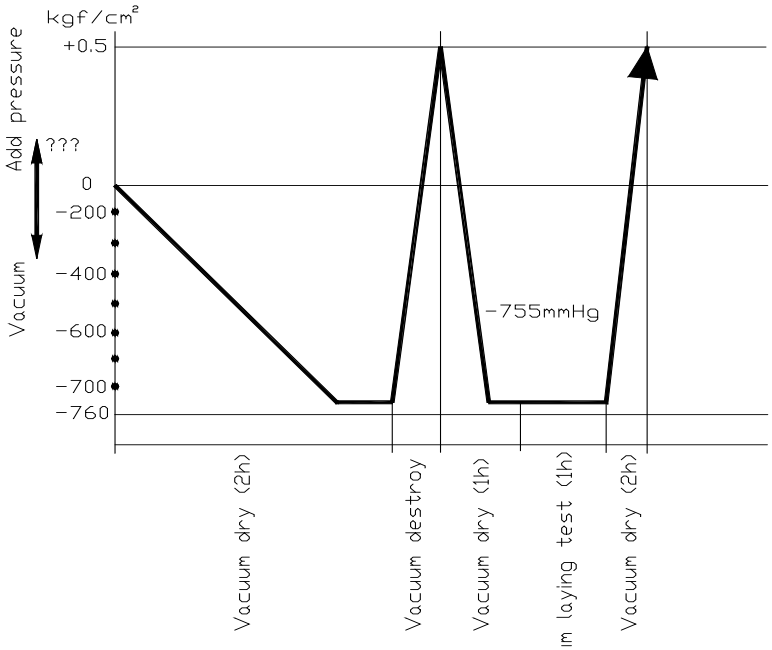

4. Additional Refrigerant Charge

Caution

- Refrigerant cannot be charged until the field wiring is completed.
- Only charge the refrigerant after performing the leak test and vacuum pumping.
- When charging the system, ensure the maximum permissible charge is never exceeded, due to the danger of liquid hammer.
- Charging with an unsuitable substance may cause explosions and accidents. Ensure that the appropriate refrigerant is charged.
- Refrigerant containers must be opened slowly.
- Always use protective gloves and protect your eyes when charging refrigerant.

Weigh-In Method

The factory charge in the outdoor unit is sufficient for 25 ft (7.6m) of standard size interconnecting liquid line. Additional 0.54 oz/ft refrigerant is needed when the length of the pipe is more than 25 ft (7.6m).

Additional Refrigerant Guidelines

Piping length (ft)	Additional charge (oz)
25.0	0.00
50.0	13.5
75.0	27
100.0	40.5

Subcooling Method (10°F/-12.2°C ± 2°F/-16.7°C)

Check the ambient temperature. Subcooling method (Cooling mode) is only for outdoor temperatures between 68°F(20°C) and 113°F(45°C), and indoor temperatures between 68°F(20°C) and 89°F(31.7°C). For temperature out of the range, use the weighing method mentioned above.

1) Start Forced Cooling Mode

Press and hold the "Check (K3)" button for about 5s to enter Forced Cooling mode. The LED display will show "dC".

2) Wait Until the System is Basically Stable

After the Forced Cooling mode starts, wait 20 min. The compressor will maintain a specific frequency in the Forced Cooling mode.

3) Calculate the Subcooling Value

Calculate the subcooling value with the measured liquid line temperature and pressure. If the calculated subcooling value is lower than the design subcooling value of 10°F(-12.2°C) ± 2°F(-16.7°C), add refrigerant. If the calculated subcooling value is higher than the value shown in the "R-454B Refrigerant Physical Property" table, recover some refrigerant.

4) Adjust the Refrigerant

Connect the service tools to the unit and adjust the refrigerant according to the analysis.

5) Wait for System Stabilization

After waiting 5 min, repeat steps 4 and 5 until the subcooling value matches the design subcooling value mentioned in step 4.

6) Recover Normal Mode

Remove service tools and press the "Check (K3)" button to quit the Forced Cooling mode. The "dC" code will disappear after quitting the Forced Cooling mode.

Liquid Line Temp (°F)	Subcooling Value(°F)							
	6	7	8	9	10	11	12	13
	Liquid Gauge Pressure (PSI)							
55	164	167	170	172	175	178	181	184
60	178	181	184	187	191	194	197	200
65	194	197	200	203	206	210	213	217
70	210	213	217	220	223	227	230	234
75	227	230	234	238	241	245	249	252
80	245	249	252	256	260	264	268	272
85	264	268	272	276	280	284	288	292
90	284	288	292	297	301	305	309	314
95	305	309	314	318	323	327	332	336
100	327	332	336	341	346	351	355	360
105	351	355	360	365	370	375	380	385
110	375	380	385	390	396	401	406	412
115	401	406	412	417	422	428	433	439
120	428	433	439	445	450	456	462	468
125	456	462	468	474	480	486	492	498

Subcooling (°F)		Ambient Remperature (°F)				
		68~77	77~86	86~95	95~104	104~113
Model	24K	10±2	8±2	8±2	6±2	6±2
	36K	10±2	8±2	8±2	6±2	6±2
	48K	8±2	8±2	8±2	6±2	6±2
	60K	8±2	8±2	8±2	6±2	6±2

5. Insulation Work

5.1 Insulation Material and Thickness

Insulation material

Use insulation material that can endure the pipe's temperature:

- No less than 158°F(70°C) in the high-pressure side.
- No less than 248°F(120°C) in the low-pressure side.
- For cooling-only machines, there are no requirements at the low-pressure side.

Examples:

- Heat pump type: Heat-resistant polyethylene foam (withstand above 248°F/120°C)
- Cooling-only type: Polyethylene foam (withstand above 212°F/100°C)

Thickness Choice for Insulation Material

Insulation material thickness is as follows:

	Pipe Diameter (mm)	Adiabatic Material Thickness (mm)
Refrigerant Pipe	Φ6.4—Φ25.4	0.39 in (10mm)
	Φ28.6—Φ38.1	0.59 in (15mm)
Drainage Pipe	Inner diameter Φ20—Φ32	0.24 in (6mm)

5.2 Refrigerant Pipe Insulation

Work Procedure

1) Before laying the pipes, apply heat insulation to the non-jointing and non-connection parts.
2) When the gas proof test is eligible, apply heat insulation to the jointing area, expanding area, and flange area.

Insulation for Non-jointing and Non-connection Parts

Wrong	Correct	
Do not put the gas pipe and liquid pipe together to insulate	Insulate the gas pipe (Cooling only)	Insulate the gas pipe and liquid pipe

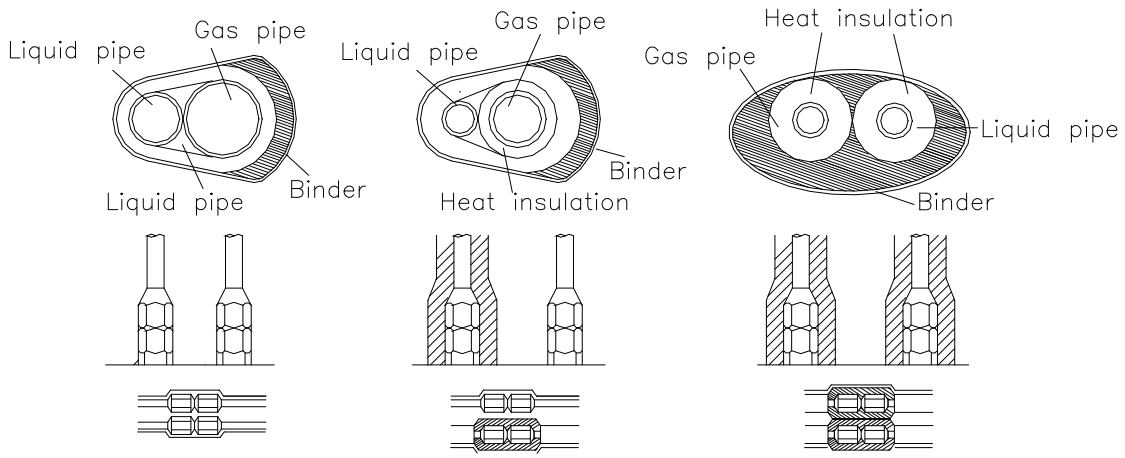

Before laying pipes, use insulation material to insulate the pipes. At the same time, leave a sufficient length uninsulated at both ends of the pipe to allow for welding and subsequent leakage checks.

Insulation for the Jointing Area, Expanding Area, and Flange Area

1) After checking the pipes for leakage, insulate the jointing area, expanding area, and flange area.
2) Ensure there is no clearance in the joining part of the accessorial insulation material and local preparative insulation material.

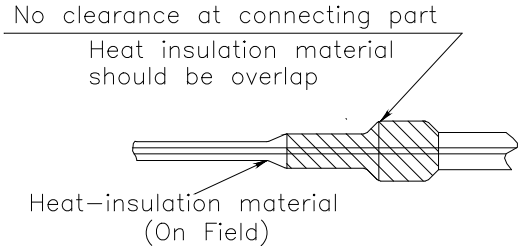

5.3 Drainage Pipe Insulation

Ensure the connection part is insulated, otherwise water will condense at the non-insulation part.

5.4 Notes for Insulation Work

- After passing the pressure test, apply heat insulation to the jointing area, expanding area, and flange area.
- Apply heat insulation to the gas and liquid pipes individually. Apply heat insulation to the connecting part individually.
- Insulate the pipe connections (pipes' tie-in, expand nut) of the indoor unit using the attached heat-insulation material.

6. Test Operation

1) Complete this test operation after the entire installation is finished.

2) Confirm the following points before beginning the test operation:
- The indoor and outdoor units are properly installed.
- Tubing and wiring are correctly completed.
- The refrigerant pipe system has been checked for leakage.
- The drainage is not obstructed.
- The ground wiring is correctly connected.
- The tubing length and the added stow capacity of the refrigerant have been recorded.
- The power voltage fits the rated voltage of the air conditioner.
- There are no obstructions in the outlet and inlet of the indoor and outdoor units.
- The gas-side and liquid-side stop valves are both open.
- The air conditioner is pre-heated by turning on the power.

3) According to the user's requirements, install the 24V thermostat.

4) Test operation:
Set the air conditioner to Cooling mode with the thermostat. Ensure the following:

Indoor Unit
- The fan motor operates correctly.
- The room temperature is well-adjusted.
- The indicator lights of the indoor board are functioning normal.
- The drainage is normal.
- There are no vibrations or abnormal noises during operation.

Outdoor Unit
- There are no vibrations or abnormal noises during operation.
- No generated wind, noise, or condensation from the air conditioner has influenced your neighborhood.
- No refrigerant leakage.

The design and specifications of this product are subject to change without prior notice as development continues. Consult with the sales agency or manufacturer for details. Refer to the equipment nameplate for all other applicable specifications.

PIONEER®

is a registered trademark of Parker Davis HVAC International, LLC.

Parker Davis HVAC International
7290 NW 77 Court, Miami, FL 33166 - USA
Tel : (305) 513-4488
Fax : (305) 513-4499
E-mail : info@pdhvac.com
Website: www.pdhvac.com

Pioneer product line, parts, and supplies are available online for convenient ordering at:
www.highseer.com
www.pioneerminisplit.com

Scan the below code to visit our support page where you can find more installation materials:

SCAN ME

Copyright © Parker Davis HVAC International, LLC. All rights reserved.