Job Name:	
Submitted By:	

Submittal Sheet For: DC036GCSICDHRT / YD2436GCSI18RD

Date _____

Ref. _____

Central Split Ducted 18SEER Inverter Heat Pump

System Full Set Model: **DYC036GCSI18RD**

AHRI Reference Number: **217048498**

Cooling Mode Performance

Rated Cooling	34,000 BTU/hr
Ambient Range	5~131°F
SEER2 Rating	18.6 BTU/W·h
EER2 Rating	11.7 BTU/W·h

* 100% Capacity @ Indoor DB 80°F / WB 67°F

Heating Mode Performance

Rated Heating	34,200 BTU/hr
Ambient Range	-4~86°F
HSPF2 IV	9.0 BTU/W·h
COP (5°F)	2.1 W/W

Heating (17°F) = 24,000 BTU / Heating (5°F) = 24,000 BTU



Central Split Ducted Indoor Unit



Outdoor Condensing Unit



Installation Kit



Thermostat

Electrical Information

	Cooling	Heating
Rated Input (W)	2,864	2,997
Rated Current (A)	12.8	12.8
Minimum Circuit Ampacity	20A (Outdoor) / 4A (Indoor)	
Power Supply	**208~230V, 1Ph, 60Hz**	

Piping and Refrigerant

Liquid Line (OD)	3/8 in
Suction Line (OD)	3/4 in
Refrigerant Precharge	R-454b (Sweat-Type Lineset)
Max Length/Height Diff.	100 ft. / 50 ft.

This combination is Energy-Star certified.

ENERGY STAR

Interior Unit (Air Handler) Specifications

Type	Heat Pump
Sound Level (dBA)	52 (Hi) / 49 (Lo)
Auto Air Circulation	2-Way Louver (Up-Down + Left-Right)
Dimensions (WDH)	19-5/8 in x 22 in x 45-3/4 in
Weight (lbs)	130

Exterior Unit (Condenser) Specifications

Sound Level (dBA)	79
Throttle Type	EEV
Outdoor Fan Type	DC
Compressor	Twin-Rotary
Dimensions (WDH)	29-1/8 in x 29-1/8 in x 25 in
Weight (lbs)	137

DC036GCSICDHRT Air Handler Dimensional Data

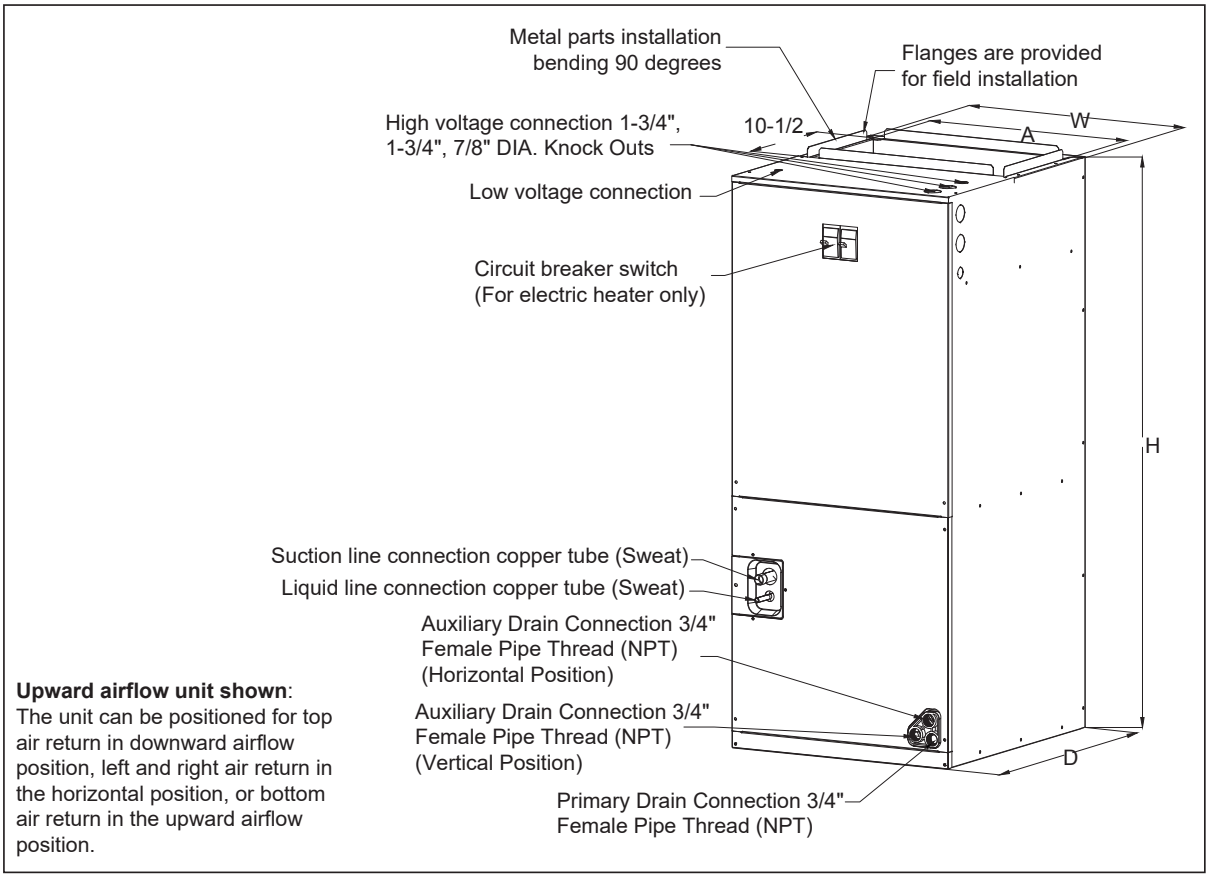

Upward airflow unit shown: The unit can be positioned for top air return in downward airflow position, left and right air return in the horizontal position, or bottom air return in the upward airflow position.

Model	Dimension Inches (mm)				
	Height "H"	Width "W"	Dimension "D"	Air outlet "A"	Liquid Line / Suction Line
36K	45-3/4 in (1,162 mm)	19-5/8 in (500 mm)	22 in (560 mm)	17-7/8 in (454 mm)	3/8 in / 3/4 in (9.5 mm / 19 mm)

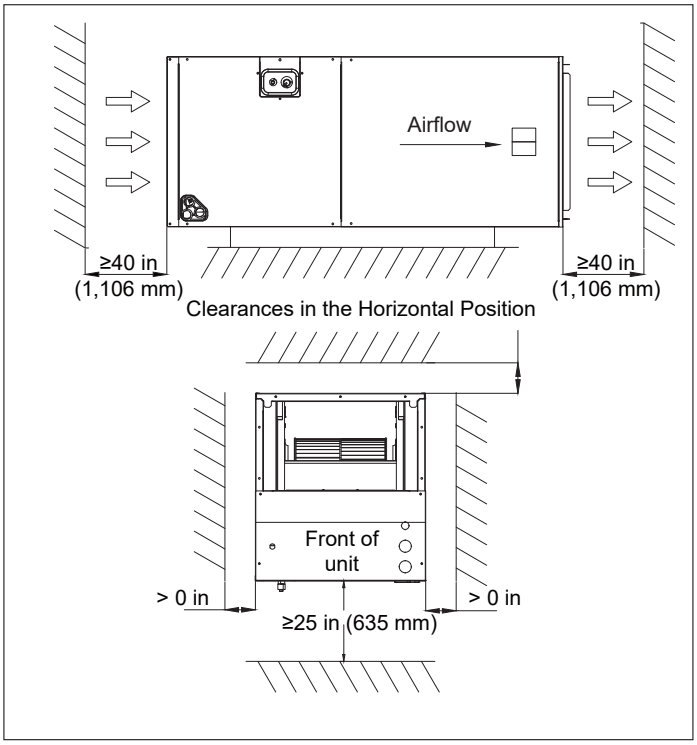

YD2436GCSI18RD Condenser Unit Dimensional Data

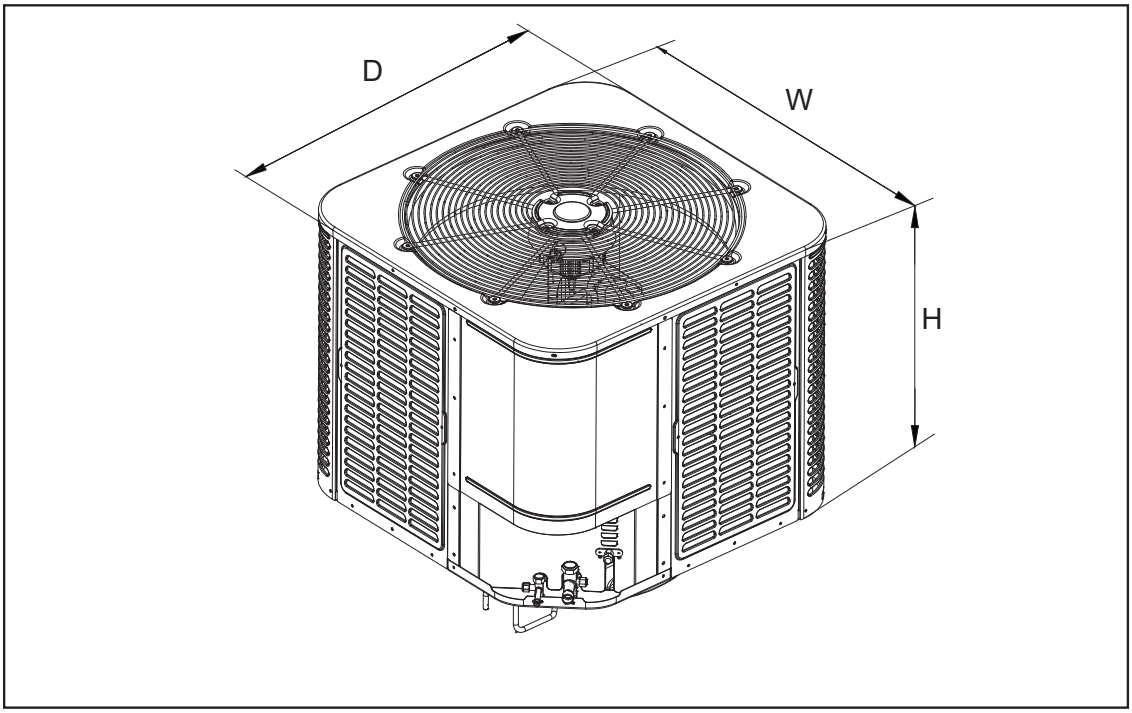

Unit Size	Dimensions
Model	W x D x H Inches (mm)
24K	29-1/2 in x 29-1/2 in x 25 in (749.3 mm x 749.3 mm x 635 mm)



Warranty Information and Length

Complete warranty details are available with the vendor or online at https://www.pdhvac.com/support/warranty/. This high quality system is eligible for up to 10 years limited warranty on the compressor, and 7 years on other internal parts. To qualify for this warranty, the system must be installed within 90 days by a registered technician. All other installations that are registered default to 5 years parts/ compressor. Products unregistered qualify for only 1 year parts/ compressor warranty.

Outstanding Features

- LED Display
- Energy Saving
- Ultra-Thin Design
- Dual Drain Options
- Customizable Timer
- Eco-Friendly Refrigerant
- Whisper-Quiet Operation
- Power Loss Memory Recovery

airlink

WiFi

Available Accessories

Part Number	Description
IKT-LCVR4P-KIT	*Decorative PVC Line Cover Kit*
IKT-LNBR-1/4-3/8	*BendAid Flexible Easy Bender Kit*
BRK-FRM-C-2P	*Folding Mounting Bracket w/ Leveler*
IKT-UVL32UL-AG	*UVC Bacterial Disinfection Kit*
IKT-SURPRK-DV2	*Ultimate Surge and Power Protection*