DUCTED CENTRAL SPLIT SYSTEM AIR CONDITIONER / HEAT PUMP

PIONEER®

DYC-18 Inverter Series

For 24,000-60,000 BTU/hr Systems

Quantum Ultra (R-454B) - YD Outdoor (2/3 Ton & 4/5 Ton)

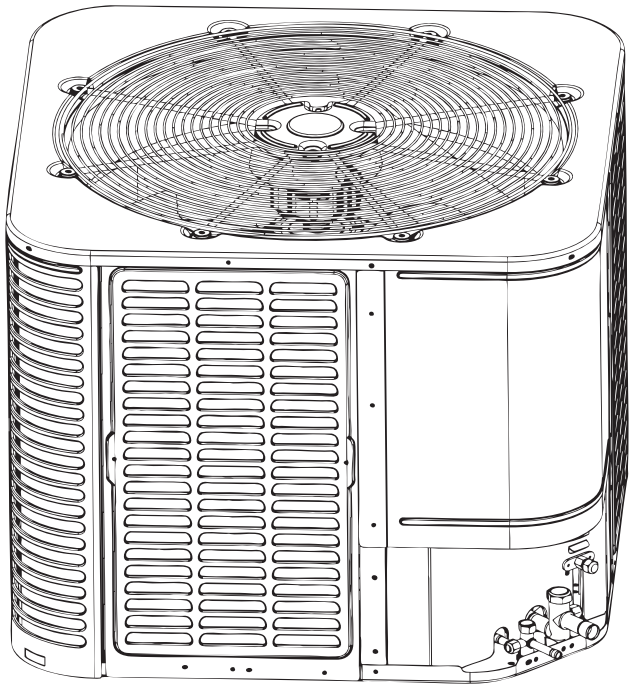

Models:

- **YD2436GCSI18RD**
- **YD4860GCSI18RD**

Installation & User Manual

IMPORTANT NOTICE:
Read this manual carefully before installing or operating your new air conditioning system. Be sure to save this manual for future reference.

REV250529

CONTENTS

1. Safety Symbols & Instructions 2
2. Considerations for Unit Location 13
3. Unit Installation Preparation 20
4. Unit Settings 21
5. Precautions for Refrigerant Pipeline 22
6. Refrigerant Pipeline Routing 24
7. Refrigerant Line Brazing 27
8. Refrigerant Line Leakage Inspection 29
9. Vacuuming 30
10. Service Valve 31
11. Electrical-Low Voltage 32
12. Electrical-High Voltage 37
13. Start 39
14. System Refrigerant Charging Method 40
15. System Operation & Troubleshooting 44
16. Wiring Diagram 61
17. Cleaning & Maintenance 63
18. Water Float Switch Wiring 64
19. RS-485 Wiring & Thermostat 65
20. Disposal Guidelines 68

Safety Symbols & Instructions

1

Symbol Keywords

	**Warning**	The warnings in this document are identified by warning triangles printed on a black background. The keyword at the beginning of the warning indicates the type and severity of the risk if no measures are taken to prevent it.

The following keywords are defined and used in this document:

▶	**Dangerous**	Means a hazardous situation, which will lead to death or serious injury if not avoided.
▶	**Warning**	Indicates a hazardous situation, which may lead to death or serious injury if not avoided.
▶	**Caution**	Indicates a hazardous situation, which may cause mild to moderate injury if not avoided.
▶	**Note**	Used to deal with behaviors unrelated to personal injury.

Important Information

	This symbol represents important information that is not harmful to people or property.

Safety Symbols & Instructions

1

Safety

Read before continuing

Warning	▶ Failure to observe this warning may result in property damage, serious personal injury, or death.
	▶ Before touching the electrical components, wait for 3 minutes after disconnecting the power supply.

Notice	▶ This document is the property of the customer and should be kept by this unit. When finished, return the document to the service information package.
	▶ These instructions do not cover all changes in the system, nor do they provide all unexpected situations that may be encountered during installation.
	▶ If more information is needed or there are special problems that are not sufficient for the buyer, consult the installation or local dealers.

Maximum efficiency, best performance, and best overall system reliability are some of the benefits of installing an approved indoor and outdoor split system.

Safety Symbols & Instructions 1

Safety (Continued)

Warning:

- Qualified personnel with a certification for handling refrigerant fluids must install the unit. Refer to the regulation and laws for the installation location.
- A certified technician must perform the installation, service, maintenance, and repairs of this unit.
- Only complete the servicing as recommended by the manufacturer.
- A certified technician must perform the product uninstallation and recycling.
- The appliance is designed to be operated in an outdoor area. If installing the appliance indoors is needed, store the appliance in a room without continuously operating open flames (an operating gas appliance) and ignition sources (an operating electric heater).
- Children aged 8 and above, as well as individuals with lack of experience or reduced physical, sensory, or mental capabilities can only use the appliance if supervision or instruction is given. Children must not play with or near the appliance. Children or untrained personnel should be restricted from cleaning and performing maintenance on the appliance, unless they're given supervision.
- Install the appliance in accordance with national wiring regulations.
- Before accessing the connection terminals, disconnect all power circuits.
- This information is intended to be used by individuals with sufficient electrical and mechanical experience background. Attempting to repair central air conditioning products may result in personal injury and/or property damage.

Warning: Dangerous Voltage

- Failure to observe this warning may result in property damage, serious personal injury, or death.
- Can cause injury or death. Disconnect all remote electric power supplies before servicing. Follow proper locking/tagging procedures to ensure that the power supply will not be energized accidentally.

Safety Symbols & Instructions 1

Safety (Continued)

Warning: Refrigerant Oil

Attempting to repair central air-conditioning products may result in property damage, serious personal injury, or death. These units use R-454B refrigerant, which has a working pressure that is 50-70% higher than R-22. Use only the service equipment approved by R-454B. The refrigerant cylinder is painted "rose" to indicate the type of refrigerant. The cylinder may contain a "dip" tube to allow liquid refrigerant to be filled into the system. This system uses POE oil (VG74, VG75, or equivalent), which can easily absorb moisture from the atmosphere. In order to limit the effect of the moisture absorption, seal the system as much as possible. If the system is exposed to the atmosphere for more than 4 hours, change the compressor oil. Do not destroy the vacuum with air. Always replace the filter dryer when opening the system for component replacement.

Warning: Hot Surface

May cause mild to severe burns. Failure to observe this caution may result in property damage or personal injury. Do not touch the top of the compressor.

Caution: Contains Refrigerant

Failure to follow the correct procedures will lead to personal illness, injury, or serious equipment damage. The system contains high-pressure oil and refrigerant. Before opening the system, recover the refrigerant to release the pressure.

Note: Indoor Unit Required

The indoor unit must match with the thermal expansion valve. The model of TXV can be changed according to the system capacity.

Note:

The manufacturer recommends installing only approved matched indoor and outdoor systems. All of the manufacturer's split system are AHRI-rated only with TXV indoor systems. Maximum efficiency, optimum performance, and the best overall system reliability are some of the benefits of installing approved matched indoor and outdoor split systems.

Note: Grounding Required

Failure to check or use the correct maintenance tools may result in equipment damage or personal injury. Reconnect all grounding devices. Ensure all parts of this product that can conduct current are grounded. If the grounding wire, screw, strap, clip, nut, or washer used to complete the grounding path is removed during maintenance, it must be put back in place and properly fixed.

Safety Symbols & Instructions 1

Safety (Continued)

Warning: Service Valve

Failure to observe this warning will result in release of system pressure, which may result in personal injury or property damage. Use caution when opening the liquid pipeline service valve. Turn the valve stem counterclockwise until the valve stem touches the bead.

Warning: Brazing Required

Failure to check the wiring or use the correct maintenance tools may result in equipment damage or personal injury. If using existing refrigerant lines, ensure that all joints are brazed, not soldered.

Warning: High Current Leakage

Failure to observe this warning may result in property damage, serious personal injury, or death. Before connecting the power supply, grounding is essential.

Warning:

This product may expose individuals to chemicals including lead and lead components, which are known to cause cancer, birth defects, or other reproductive harm in California. For more information, visit www.P65Warnings.ca.gov.

Warning:

- Do not use alternative methods to accelerate the defrosting or cleaning process, other than those recommended by the manufacturer.
- The appliance is designed to be operated in an outdoor area. If installing the appliance indoors is needed, store the appliance in a room without continuously operating open flames (an operating gas appliance) and ignition sources (an operating electric heater).
- Do not pierce or burn.
- Be aware that refrigerants may not contain an odor.

Safety Symbols & Instructions

1

	**Warning**	This symbol indicates that this appliance used a flammable refrigerant. If the refrigerant is leaked and exposed to an external ignition source, there is a risk of fire.
	**Caution**	This symbol indicates that the operation manual should be read carefully.
	**Caution**	This symbol indicates that service personnel should be handling this equipment with reference to the installation manual.
	**Caution**	This symbol indicates that the information is available such as the operating or installation manual.

Safety Precautions for R-454B Refrigerant

Warning

- Do not attempt to accelerate the defrosting process or remove frost manually.
- Store the appliance in a room free of continuously operating ignition sources (e.g., open flames, active gas appliances, and operating electric heaters).
- Do not pierce or incinerate the appliance or its components.
- Be aware that refrigerants may be odorless.

Qualification of Workers

Competent individuals must carry out every working procedure, such as maintenance, service, and repair operations that affect safety. Examples for these working procedures are:

- Breaking into the refrigerating circuit.
- Opening sealed components.
- Opening ventilated enclosures.

Checks to the Area

Prior to beginning work on systems containing flammable refrigerants, complete safety checks to ensure that the risk of ignition is minimized.

Work Procedure

Conduct all work under a controlled process to minimize the risk of flammable gas or vapor from being present during service.

General Work Area

All maintenance staff and other working in the local area must be instructed on the nature of work being carried out. Avoid working in confined spaces.

Safety Symbols & Instructions 1

Safety Precautions for R-454B Refrigerant (Continued)

Checking for Presence of Refrigerant
Check the area with an appropriate refrigerant detector prior and during work, ensuring the technician is aware of potentially toxic or flammable atmospheres. Confirm that the leak detection equipment being used is suitable for use with all applicable refrigerants (i.e. non-sparking, adequately sealed, or intrinsically safe).

Presence of Fire Extinguisher
If conducting hot work on the refrigerating equipment or any associated parts, appropriate fire extinguishing equipment must be available. Have a dry powder or CO_2 fire extinguisher adjacent to the charging area.

No Ignition Sources
Individuals carrying out work related to the refrigerating system that involves exposing any pipework must not use any sources of ignition in such a manner that it may lead to a risk of fire or explosion. Keep all potential ignition sources, including smoking, at a safe distance from the installation, repair, removal, disposal areas, and locations where refrigerant may be released unintentionally into the surrounding space. Before commencing work, inspect the area to ensure that no flammable hazards or ignition risks are present. Clearly display "No Smoking" signs in the work area.

Ventilated Area
Ensure the work is conducted in either an open area or in a space with adequate ventilation before breaking into the system or performing any heat-producing tasks. Maintain ventilation throughout the duration of the work. Ensure the ventilation system effectively disperses any released refrigerant and directs it safely to an external atmosphere, if possible.

Checks to the Refrigerating Equipment
When replacing electrical components, ensure that they meet the correct specifications and are suitable for their intended purpose. Follow the manufacturer's maintenance and service guidelines. If unsure, consult the manufacturer's technical support department for guidance.

Apply the following checks to installations using flammable refrigerants:

- Ensure that the refrigerant charge size complies with the minimum room size requirements when installing refrigerant-containing components.
- Verify that the ventilation equipment and exhaust outlets are functioning properly and are free from obstructions.
- If using an indirect refrigerant circuit, inspect the secondary circuit for any presence of refrigerant.
- Confirm that all equipment markings remain visible and legible. Replace or correct any illegible markings or signs.
- Install the refrigeration piping and components in locations where they are not exposed to substances that could cause corrosion. If exposure is unavoidable, verify that the components are either made from corrosion-resistant materials or are adequately protected against corrosion.

Safety Symbols & Instructions 1

Safety Precautions for R-454B Refrigerant (Continued)

Checks to Electrical Devices
Ensure the repair and maintenance of electrical components include initial safety checks and a thorough inspection of components. If the fault cannot be corrected immediately but continuing work is necessary, implement a temporary solution that is safe and effective. Report any temporary measures to the equipment owner, ensuring all relevant parties are informed.

Initial safety checks must include:

- Fully discharging the capacitors in a controlled manner to prevent sparking.
- Verifying that no live electrical components or exposed wiring are present during system charging, refrigerant recovery, or purging.
- Confirming that the earth bonding continuity is maintained.

Repairs to Sealed Components
Replace sealed electrical components, rather than repair them.

Repairs to Intrinsically Safe Components
Replace intrinsically safe components, rather than repair them.

Cabling
Do not expose the cabling to wear, corrosion, excessive pressure, vibration, sharp edges, or other adverse environmental factors. Consider the long-term effects of aging and continuous vibration from components such as compressors or fans.

Detection of Flammable Refrigerants
Do not use potential sources of ignition for refrigerant leak detection under any circumstances. Do not use a halide torch or any other detector using a naked flame.

The following methods are approved for detecting leaks in systems containing flammable refrigerants:

-- Electronic Leak Detectors**:** Use this method for detecting flammable refrigerants. **Note:** They may require recalibration to maintain adequate sensitivity.

- Calibrate the detection equipment in a refrigerant-free area.
- Ensure that the detector does not pose an ignition risk and is compatible with the refrigerant in use.
- Set the detector to a percentage of the refrigerant's Lower Flammability Limit (LFL). In addition, calibrate the detector to confirm that the appropriate gas concentration does not exceed 25% of the LFL.

-- Leak Detection Fluids: This method is suitable for most refrigerants but must not contain chlorine.

Note: Chlorine can react with the refrigerant and corrode copper piping. If a leak is suspected, remove or extinguish all open flames. If a refrigerant leak requiring brazing is detected, fully recover the refrigerant or isolate the refrigerant using the shut-off valves to prevent accidental release. The removal of refrigerant must be in accordance with **Removal & Evacuation.**

Safety Symbols & Instructions 1

Safety Precautions for R-454B Refrigerant (Continued)

Removal & Evacuation
Use conventional procedures when breaking into the refrigerant circuit to make repairs, etc. For flammable refrigerants, follow this procedure for best practices:

- Safely remove refrigerant following local and national regulations.
- Evacuate.
- Purge the circuit with inert gas (optional for A2L).
- Evacuate (optional for A2L).
- Continuously flush or purge with inert gas when using a flame to open the circuit.
- Open the circuit.

Recover the refrigerant charge into the correct recovery cylinders if venting is not allowed due to local and national codes. For appliances containing flammable refrigerants, purge the system with oxygen-free nitrogen to render the appliance safe for flammable refrigerants. This process might need to be repeated several times. Do not use compressed air oxygen for purging refrigerant systems.

For appliances containing flammable refrigerants, purge the refrigerants by breaking the vacuum in the system with oxygen-free nitrogen and continuing to fill until the working pressure is achieved. Vent the system to atmosphere and finally pull down to a vacuum (optional for A2L). Repeat this process until no refrigerant is within the system (optional for A2L). When the final oxygen-free nitrogen is used, vent the system down to atmospheric pressure to enable work to take place.

Keep the outlet for the vacuum pump away from any potential ignition sources and ensure ventilation is available.

Charging Procedures
In addition to conventional charging procedures, follow these requirements:

- Ensure that the contamination of different refrigerants does not occur when using charging equipment. Hoses or lines must be as short as possible to minimize the amount of refrigerant contained in them.
- Cylinders must be kept in an appropriate position according to the instructions.
- Ensure that the refrigerating system is earthed prior to charging the system with refrigerant.
- Label the system when charging is complete (if not already).
- Extreme care must be taken to not overfill the refrigerating system

Prior to recharging the system, it must be pressure-tested with the appropriate purging gas. The system must be leak-checked after completing the charging but prior to commissioning. Complete a follow up leak test prior to leaving the site.

Safety Symbols & Instructions 1

Safety Precautions for R-454B Refrigerant (Continued)

Decommissioning
Before carrying out this procedure, ensure the technician is completely familiar with the equipment and its details. It is recommended good practice to safely recover all refrigerants. Prior to carrying out the task, an oil and refrigerant sample must be taken in case analysis is required. Confirm that electrical power is available before commencing the task.

A. Become familiar with the equipment and its operation.

B. Isolate the system electrically.

C. Before attempting the procedure, ensure that:
- Mechanical handling equipment is available for handling refrigerant cylinders (if required).
- All personal protective equipment (PPE) is available and being used correctly.
- A competent person supervises the recovery process at all times.
- Recovery equipment and cylinders conform to the appropriate standards.

D. Pump down the refrigerant system, if possible.

E. If a vacuum is not possible, make a manifold so that refrigerant can be removed from various parts of the system.

F. Ensure that the cylinder is situated on the scales before recovery takes place.

G. Start the recovery machine and operate it in accordance with the instructions.

H. Do not overfill cylinders (no more than 80% volume liquid charge).

I. Do not exceed the maximum working pressure of the cylinder, even temporarily.

J. When the cylinders have been filled correctly and the process is completed, ensure that the cylinders and equipment are removed from the site promptly, as well as all isolation valves on the equipment are closed off.

K. Do not charge recovered refrigerant into another system unless it has been cleaned and checked.

Safety Symbols & Instructions 1

Safety Precautions for R-454B Refrigerant (Continued)

Labeling

Label the equipment stating that it has been decommissioned and emptied of refrigerant. The label must be dated and signed. For appliances containing flammable refrigerants, label the equipment stating the equipment contains flammable refrigerant.

Recovery

When removing refrigerant from a system for service or decommissioning, safely remove all the refrigerant.

When transferring refrigerant into cylinders, only employ appropriate refrigerant recovery cylinders. Ensure that the correct number of cylinders for holding the system charge are available. All cylinders that are used must be designated for the recovered refrigerant and labeled for that refrigerant (i.e. special cylinders for the recovery of refrigerant). Cylinders must be complete with functioning pressure-relief valves and associated shut-off valves. Evacuate empty recovery cylinders and allow them to cool before recovery occurs, if possible.

The recovery equipment must be in good working order with a set of instructions concerning the equipment that is at hand. The equipment must be suitable for the recovery of the flammable refrigerant. If in doubt, consult the manufacturer. In addition, a set of calibrated weighing scales must be available and in good working condition. Process the recovered refrigerant according to the local legislation in the correct recovery cylinder. Arrange a relevant waste transfer note. Do not mix refrigerants in recovery units and especially not in cylinders.

If removing compressors or compressor oils, evacuate them to an acceptable level, ensuring that the flammable refrigerant does not remain within the lubricant. Do not heat the compressor body with an open flame or other ignition sources to accelerate this process. When oil is drained from the system, it must be carried out safely.

Considerations for Unit Location 2

Unit Size

Table 2.1. Outdoor Operating Temperature

Model	Temperature
Cooling	5-125°F (-15-52°C)
Heating	-4-86°F (-20-30°C)

Table 2.2. Outdoor Unit Dimensions

Unit Size	
Model	W x D x H Inches [mm]
24/36K	29-½ x 29-½ x 25 [749 x 749 x 635]
48/60K	29-½ x 29-½ x 32-⅞ [749 x 749 x 835]

The weight of the unit is also printed on the carton.
When installing the outdoor unit on the roof, ensure that the roof can support the weight of the outdoor unit. Choosing an appropriate isolation is recommended to prevent sound or vibration from being transmitted to the building structure.

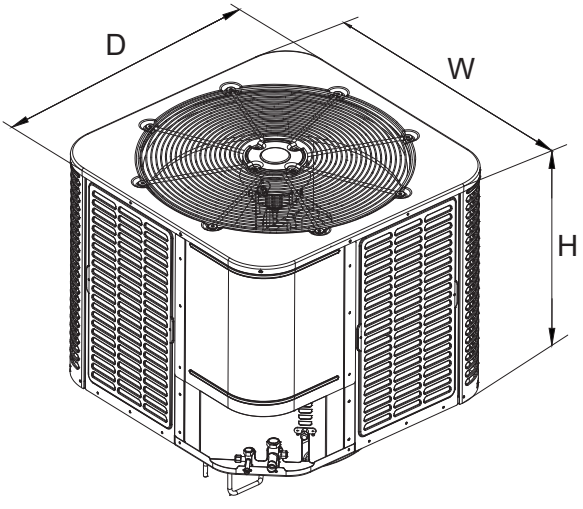

Figure 2.1.

Considerations for Unit Location 2

Refrigerant Pipeline Restriction

Table 2.3.

Refrigerant Line		Capacity (Kbtu/h)			
		24K	36K	48K	60K
Liquid Suction	in.	⅜-¾	⅜-¾	⅜-⅞	⅜-⅞
Max. Refrigerant Line Length*	ft.	100			
Max. Elevation* Vertical Lift*	ft.	50			

* It is recommended to adopt standard pipeline size; Refrigerant charge: see page.

- ▶ Maximum equivalent length of pipeline = 100 feet (30.5 m).
- ▶ Maximum vertical equivalent length = 50 feet (15 m).
- ▶ Use only the pipe diameters shown in Table 2.3.
- ▶ If the suction line exceeds 65 feet (20 m), do not use a larger suction line than recommended.

Considerations for Unit Location

2

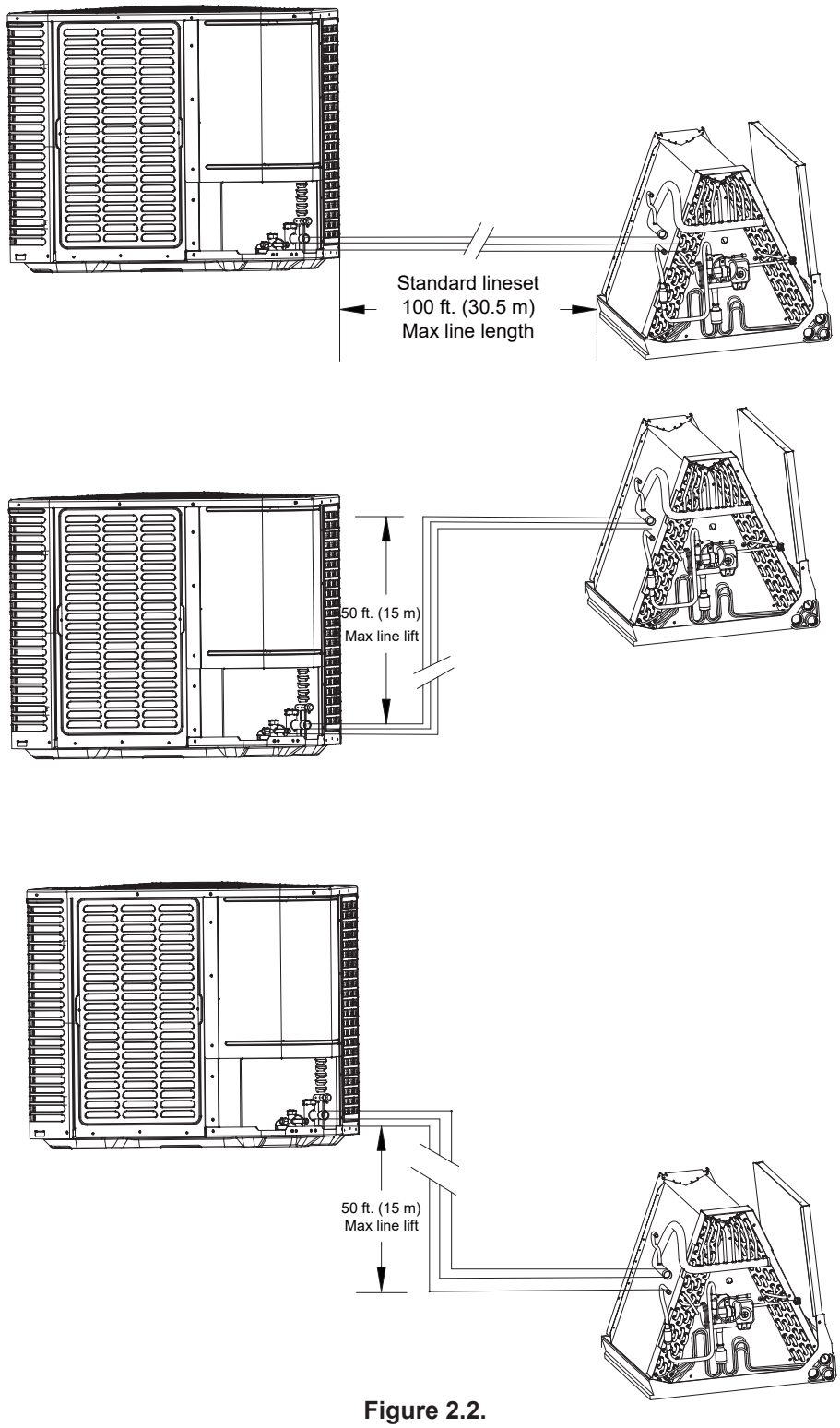

Figure 2.2.

Considerations for Unit Location 2

Long Line Installation Precautions

- The length of the connecting line from the outdoor unit to the indoor unit cannot exceed 100 feet (30.5 m).
- If all long lines are in a horizontal state, no additional measures are required.
- If there is a vertical height difference in the long line, install it according to the following requirements:

-- When the vertical height difference is 0 < h ≤ 16.5 ft (5 m), no additional measurements are required.
-- When the vertical height difference is (5 m) 16.5 ft < h ≤ 33 ft (10 m), add an oil return trap in the middle of the height difference.
-- When the vertical height difference is (10 m) 33 ft < h ≤ 50 ft (15 m), add two oil return traps at an equal distance in the height difference.

Note: The vertical height difference between the outdoor unit and indoor unit cannot exceed 50 feet (15 m). The following is the connection method of the oil return trap:

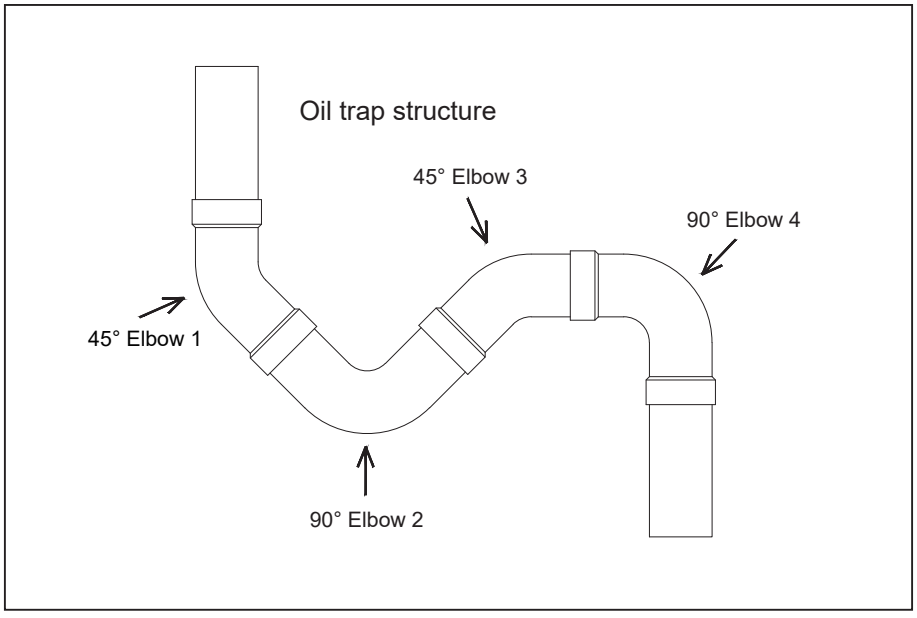

Position Restriction

- Ensure that the discharge area is unrestricted (at least 60 inches / 1,524 mm above the top of the unit).
- Do not put the outdoor unit near the bedroom, because the normal operating sound may be audible.
- Position the equipment leaving enough space for smooth airflow, wiring, refrigerant lines, and maintainability.
- Allow a minimum of 12 inches (305 mm) clearance on one side of the control board access panel to a wall, as well as a minimum 24 inches (610 mm) on the adjacent side of the control board access panel.
- Maintain a distance of 24 inches (610 mm) between the adjacent units.
- Place the unit in a location where water, snow, or ice cannot fall directly on the device from the roof of overhangs.
- See Figures 2.3. and 2.4.

Considerations for Unit Location 2

Position Restriction (Continued)

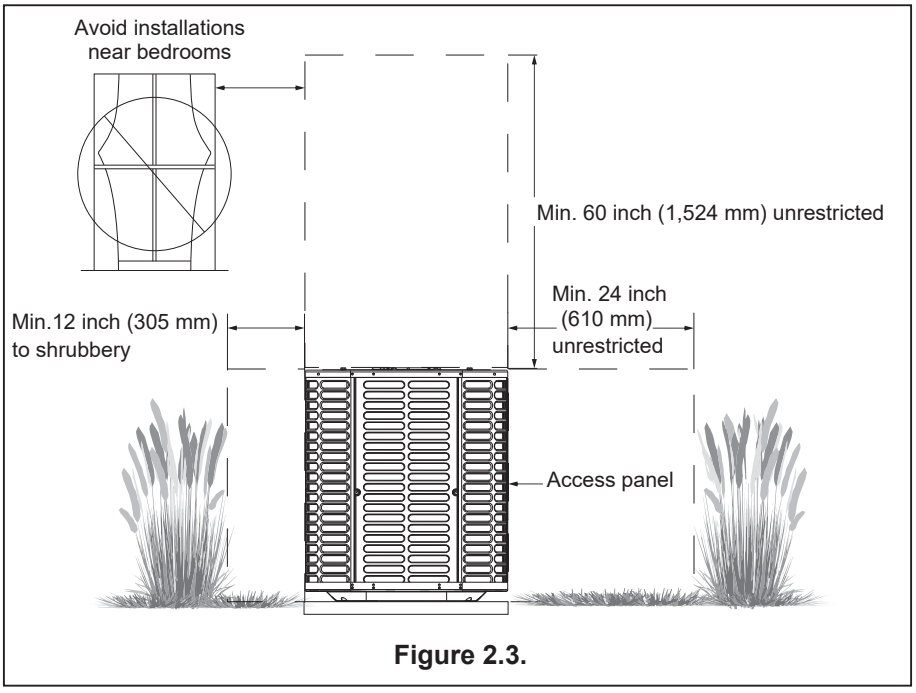

Figure 2.3.

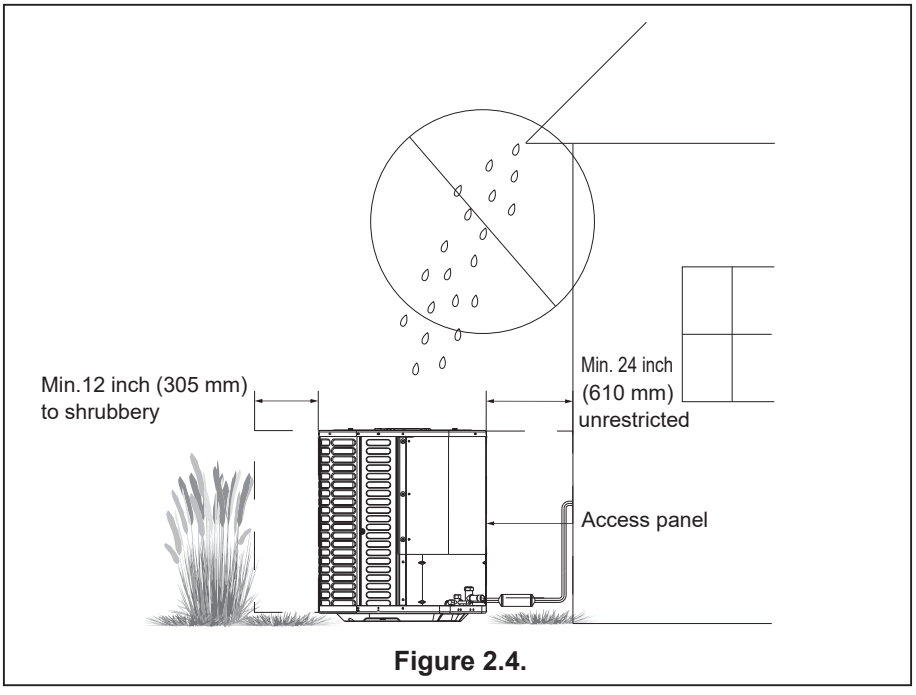

Figure 2.4.

Precautions in cold climate (heat pump only)

Precautions must be taken for units installed in areas with snow and long-term temperatures below freezing point.

Considerations for Unit Location 2

Position Restriction (Continued)

- Depending on the local weather conditions, raise the unit by 3-12 inches (76-305 mm). This extra height will allow the snow and ice melted during the defrosting cycle to be discharged before refreezing. Ensure that the drain hole on the unit chassis is not blocked, otherwise it will hinder the defrosting water discharge (See Figure 2.5.).

- If possible, avoid locations that are prone to snow. If this is not possible, install a snow barrier around the unit to prevent snow accumulation on the side of the unit.

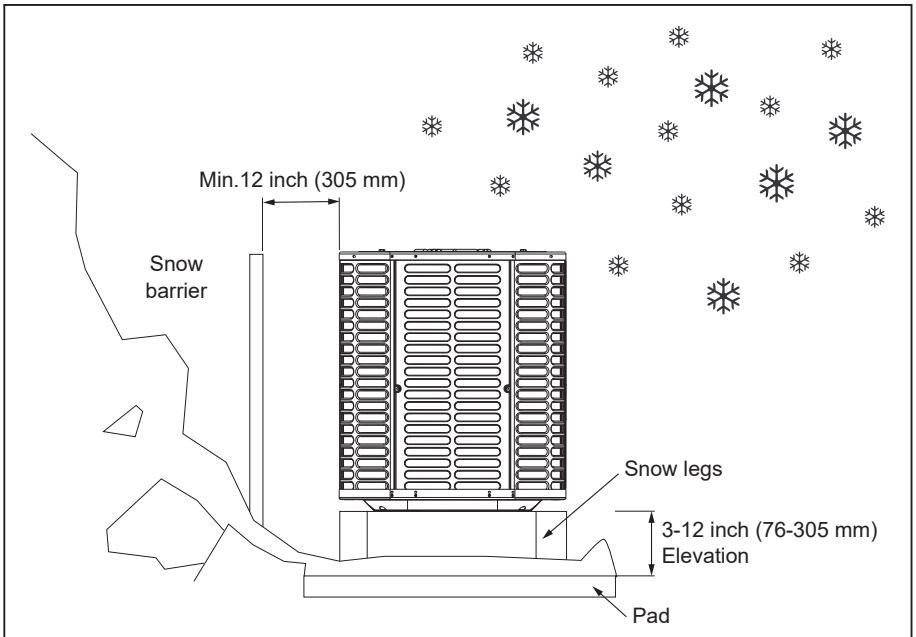

Figure 2.5.

Corrosive Environment

Exposure to a corrosive environment may shorten the service life of the unit, corrode metal parts, and negatively affect the performance of the unit. Corrosive elements include but are not limited to:

- Sodium
- Chloride
- Sodium hydroxide
- Sodium sulfate
- Compounds commonly found in seawater
- Sulfur
- Chlorine
- Fluorine
- Fertilizers
- Various chemical pollutants from industrial / manufacturing plants

Considerations for Unit Location 2

Position Restriction (Continued)

If it is installed in an area that may be exposed to corrosive environment, pay special attention to the placement and maintenance of the unit.

- Ensure that lawn sprinklers / hoses / waste water does not spray directly on the outer panel of the unit for a long duration of time.
- In coastal areas: Install the unit on the side away from the waterfront.
- Fences or shrubs can provide some shielding protection for the unit. Maintain the minimum device clearance.
- Clean the outdoor coil and any exposed external surfaces about every 3 months.

Unit Installation Preparation

3

Prepare the Unit for Installation

- Check whether there is any damage to unit. Report any damage to the courier. (Figure 3.1.).
- Use the service port to ensure that the refrigerant charge is uncompromised during shipment.



Figure 3.1.

Unit Settings

4

Pad Installation

When installing the unit on a support pad (such as a concrete slab), consider the following:

- All sides of the pad must be at least 1-2 inches (25-51 mm) larger than the unit.
- Separate the pad from any structure.
- The pad must be level.
- Ensure that the pad is high enough above the ground for drainage.
- The location of the pad must comply with national, state, and local regulations.

This procedure outlines how to fix the system to a cement slab in windy areas. Check the local regulations of tie-down methods and protocols.

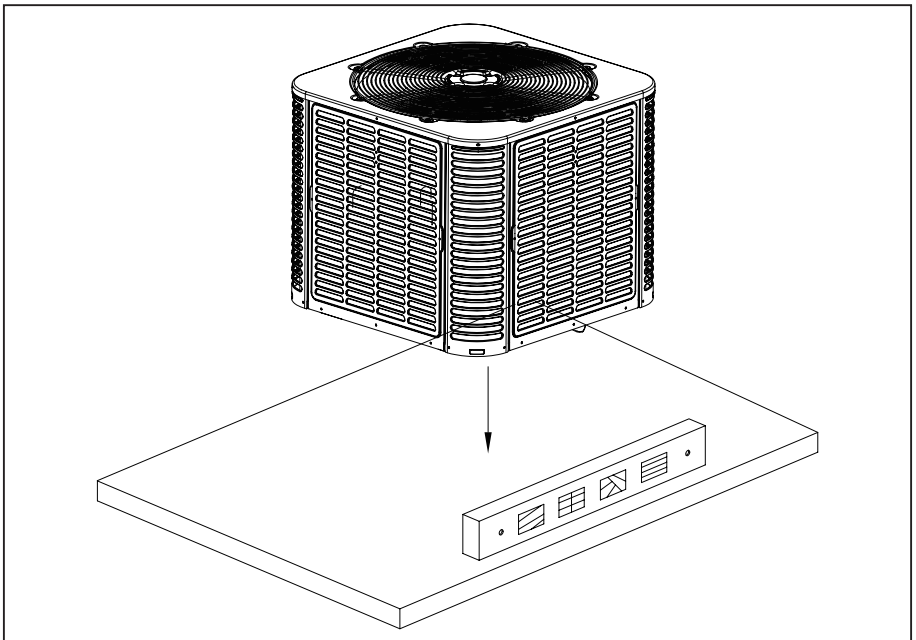

Figure 4.1.

Precautions for Refrigerant Pipeline 5

Connecting Dimensions of Refrigerant Lines & Service Valves

Table 5.1.

Model	Suction Line	Liquid Line	Suction Line Connection	Liquid Line Connection
	Dimensions Inches [mm]			
24K/36K	¾ [19]	⅜ [9.5]	¾ [19]	⅜ [9.5]
48K/60K	⅞ [22]	⅜ [9.5]	⅞ [22]	⅜ [9.5]

Required Refrigerant Line Length

Determine the required pipeline length (See Figure 5.1.)

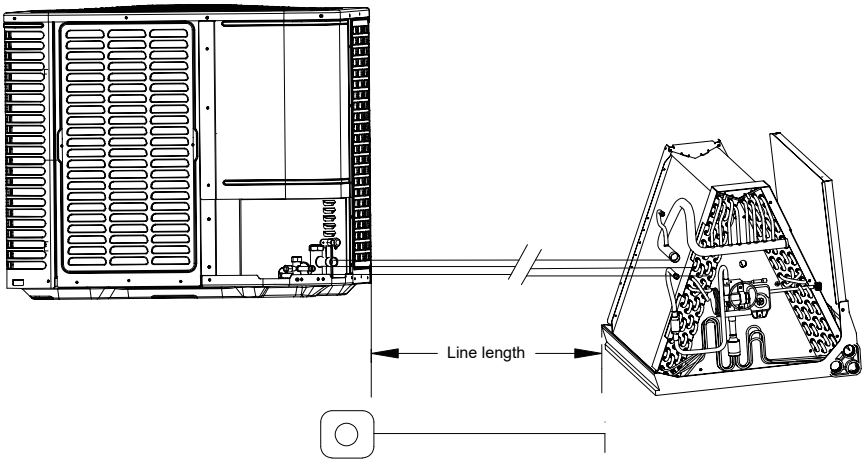

Figure 5.1.

Refrigerant Pipe Insulation

Always insulate the refrigerant pipe. Do not allow the liquid line and suction line come into direct contact (metal to metal).

Precautions for Refrigerant Pipeline 5

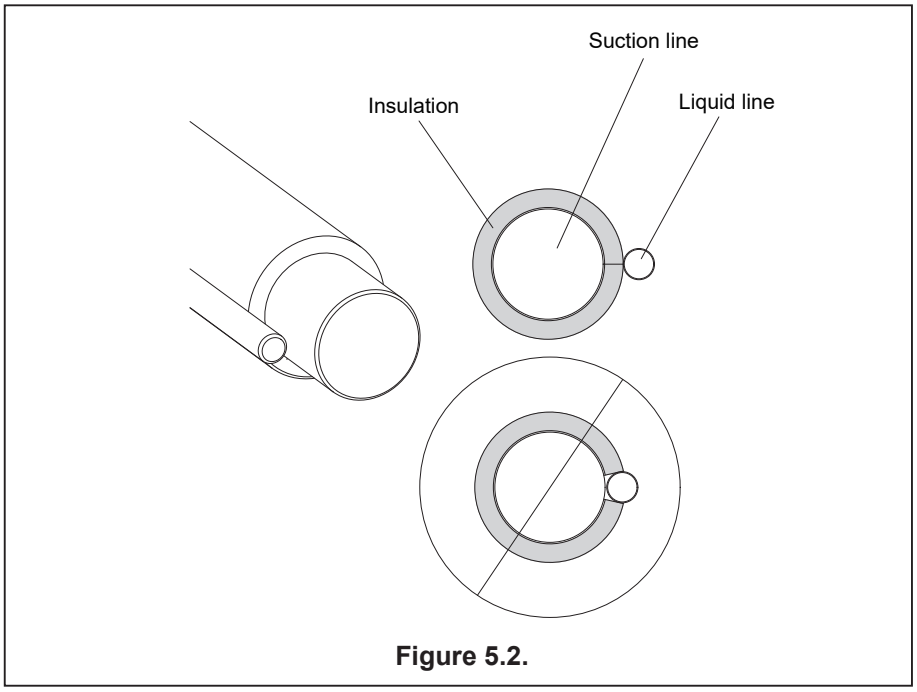

Figure 5.2.

Reuse the Existing Refrigerant Lines

Note: Mild to Moderate Burns
If using existing refrigerant lines, ensure that all joints are brazed, not soldered.

Take the following precautions for the retrofit application that will use the existing refrigerant pipeline:

- Ensure that the refrigerant line size is correct. Refer to Table 2.2.
- Ensure that the refrigerant line is free of leakage, acid, and oil.

The manufacturer recommends only installing approved matching indoor and outdoor systems. All split systems of the manufacturer are AHRI-rated, only applicable to indoor units with TXV. Maximum efficiency, best performance, and best overall system reliability are benefits of installing an approved indoor and outdoor split system.

Refrigerant Pipeline Routing 6

Preventive Measure

Take preventive measures to prevent noise generated by vibration transmission of the refrigerant line in the building structure. For example:

- When the refrigerant line must be fixed on floor joists or other frames in the structure, use isolated hangers.
- When the refrigerant line runs in the column space or closed ceiling, use isolation hangers.
- When refrigerant lines pass through walls or windowsills, ensure that they are insulated and isolated.
- Isolate the line from all ductwork systems.
- Try to reduce the number of 90° turns.

Comply with national, state, and local regulations when isolating the wire group from joists, rafters, walls, or other structural elements.

Refrigerant Pipeline Routing

6

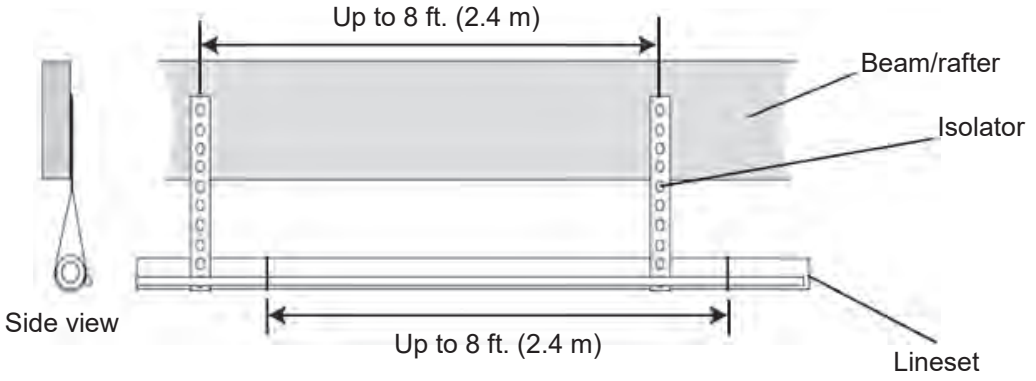

Secure the suction line from joists using isolators every 8 feet (2.4 m). Secure the liquid line directly to suction line using tape, wire, or other appropriate methods every 8 feet (2.4 m).

Isolated from Beam/Rafter
Figure 6.1.

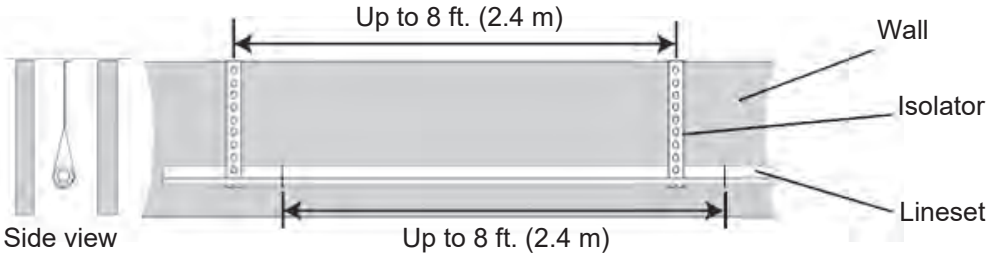

Secure the suction line from joists using isolators every 8 feet (2.4 m). Secure the liquid line directly to suction line using tape, wire, or other appropriate method severy 8 feet (2.4 m).

Isolation on the Wall
Figure 6.2.

Refrigerant Pipeline Routing

6

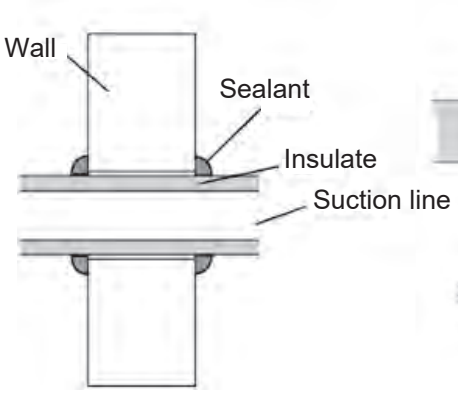

Wall Isolation

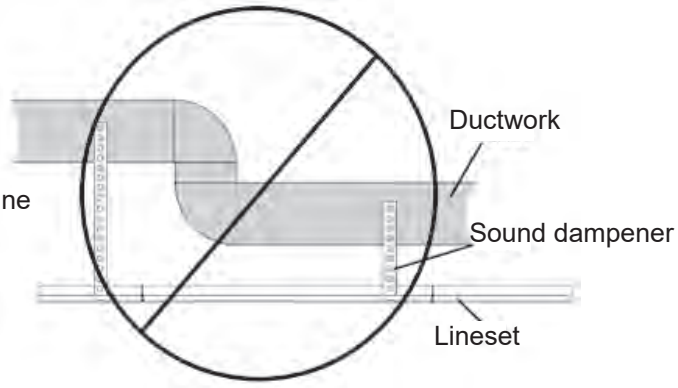

Do not hang the lineset on the duct work.

Figure 6.3.

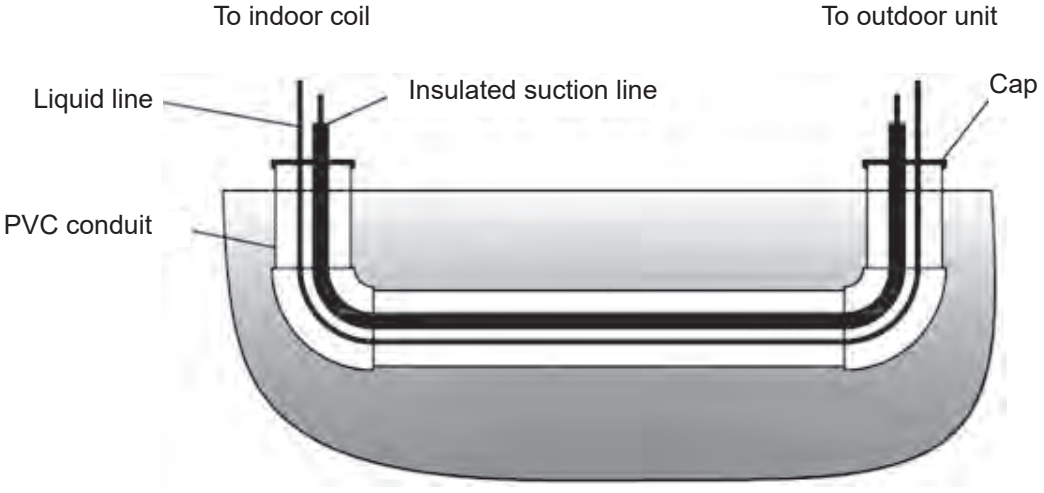

Figure 6.4.

Refrigerant Line Brazing

7

Brazed Refrigerant Pipeline

1. Remove the cover or plug. Use the deburring tool to deburr the line end. Clean the inner and outer surfaces of the pipeline with an emery cloth.

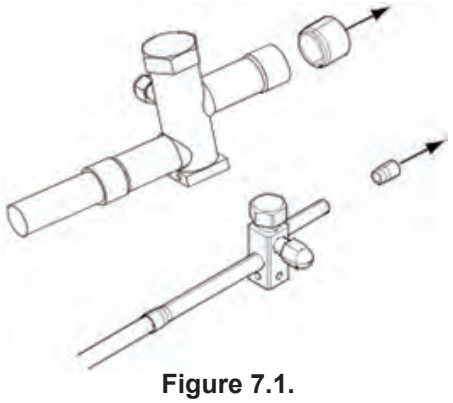

Figure 7.1.

2. Remove the pressure taps from the two service valves.

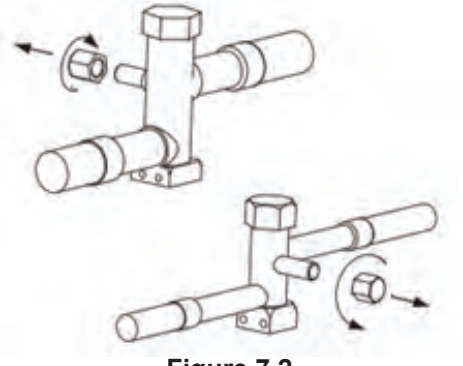

Figure 7.2.

3. Purge refrigerant lines and indoor coils with dry nitrogen.

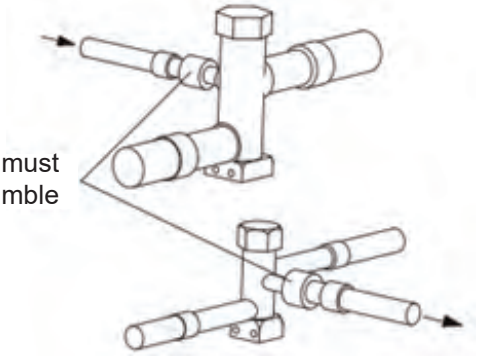

Figure 7.3.

Refrigerant Line Brazing

7

4. Wrap the valve body with a wet rage to avoid thermal damage and continue the dry nitrogen purging (See Figure 7.4.).

Braze the refrigerant line to the service valve.
Braze the filter dryer to the liquid line.

All units are recommended to have a bidirectional filter driver installed. Braze the filter dryer to the liquid line, taking care not to push the refrigerant line too hard through the stopper in the filter dryer (this may damage the filter).

Continue the dry nitrogen purge. Do not take off the wet rage before all brazing is completed.

Before stopping the dry nitrogen purge, remove the wet rag.

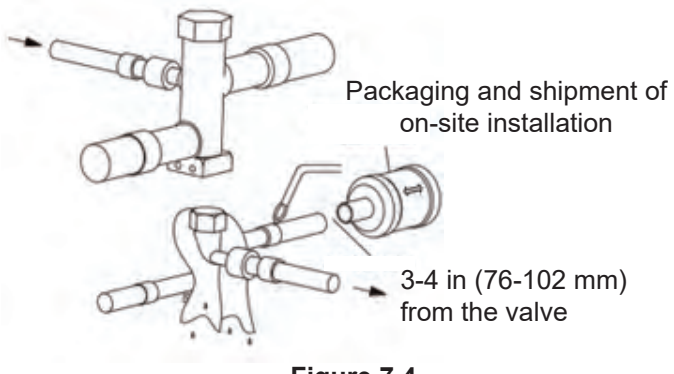

Figure 7.4.

5. After the service valve cools down, put back the pressure tap.

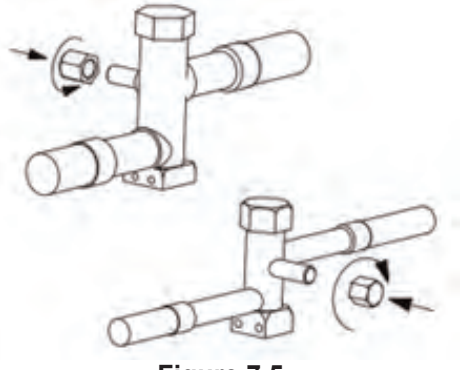

Figure 7.5.

Refrigerant Line Leakage Inspection 8

Check for Leaks

1. Use dry nitrogen to pressurize the refrigerant line and evaporator coil to 250 PSIG*.



Figure 8.1.

2. Use soapy water or bubbles at each brazing position to check for leaks.

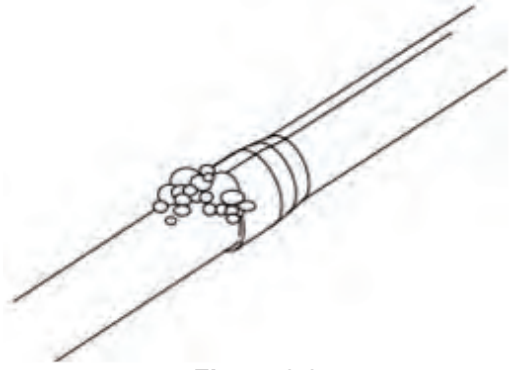

Figure 8.2.

*** Note:**

After completing the field piping for split systems, pressure test the field pipework with an inert gas. Then vacuum test the field piping prior to refrigerant charging. The minimum test pressure for the system must be the low side design pressure. See the nameplate for details.

Vacuuming

9

Drain Refrigerant Lines & Indoor Coils

Do not open the service valve until the leakage inspection and vacuuming of refrigerant lines and indoor coils are completed.

1. Evacuate until the micron gauge reads no higher than 350 microns, then close the valve to the vacuum pump.

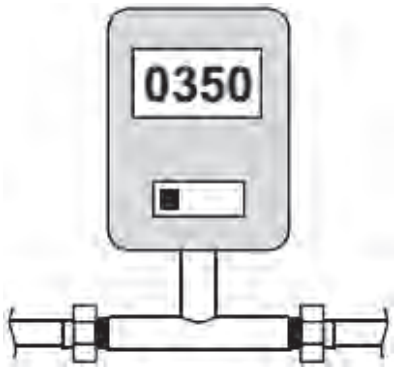

Figure 9.1.

2. Observe the micron gauge. If the micrometer does not rise above 500 microns within 1 minute, the evacuation is completed.

After the evacuation, turn off the vacuum pump and micron gauge. Then close the valve on the manifold instrument cluster.



Figure 9.2.

Service Valve

10

Open the Service Valve

Warning: Moderate to Severe Burns

Use caution when opening the liquid line service valve. Turn the valve counterclockwise until the valve stem just touches the hem. No torque is required. Failure to observe this warning will result in a sudden release of system pressure, potentially resulting in personal injury and property damage. Use an allen/ hex wrench of minimum Rc-Rockwell Hardness Scale.

Before opening the service valve, complete the leakage inspection and evacuation. Use the valve of copper welded pipe installation for leakage inspection and vacuum pumping. Using a separate suction port in this process will lead to refrigerant loss.

Before opening the liquid service valve, first open the suction service valve.

1. Remove the valve cover (Figure 10.1.).

2. Insert the hex wrench into the valve stem completely, then back out counterclockwise until the valve stem just touches the bead. About 5 turns.

3. Replace the valve stem cap to prevent leakage. Tighten the cap with your fingers and turn it for another 1/6 turn.

4. Repeat steps 1-3 for the liquid service valve.

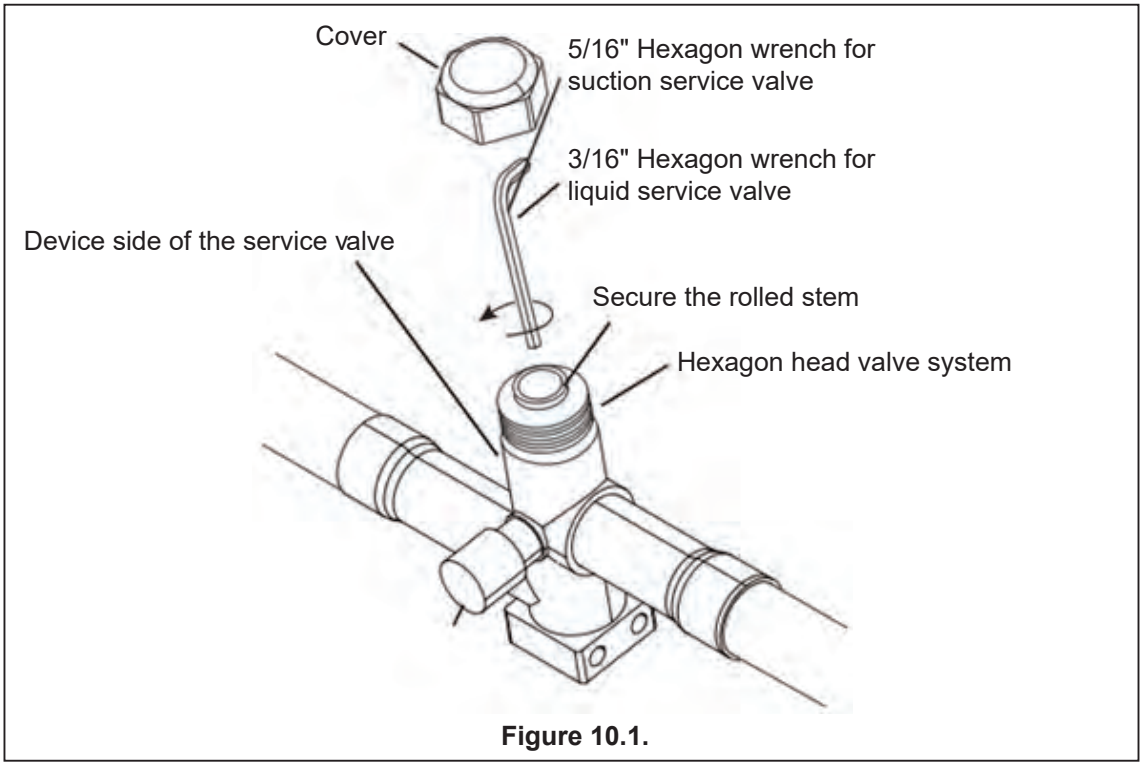

Figure 10.1.

Electrical-Low Voltage

11

Low Voltage Connection Diagram

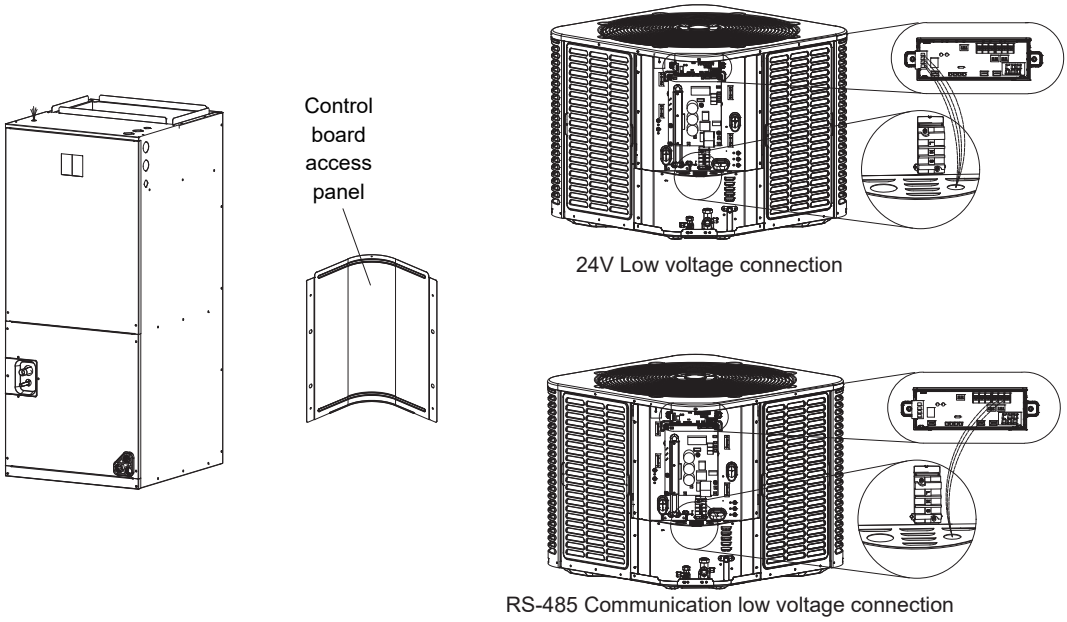

Figure 11.1. Connection of Low Voltage Device

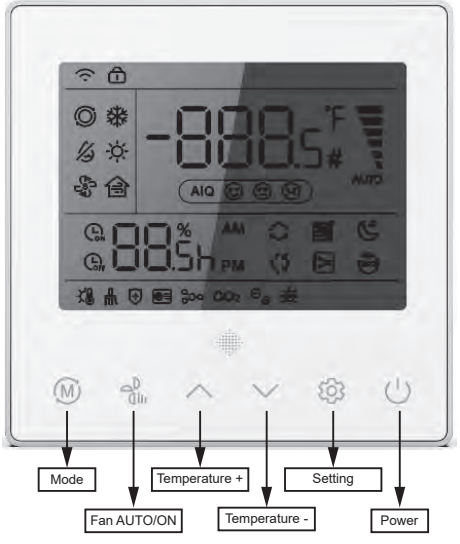

Figure 11.2. Button Definitions of Manufacturer's RS-485 Communicative Thermostat

Electrical-Low Voltage

11

Wiring Diagram of Thermostat

- Ensure that the power supply is consistent with the nameplate of the unit.
- The power connection and grounding of the unit must comply with local regulations.
- Low voltage wiring to be No. 22 AWG minimum conductor.
- "-----" On-site installation of electrical auxiliary heat connection.
- Single-stage electric auxiliary heating supported by 2H thermostat.
- Two-stage electric auxiliary heating supported by 3H thermostat.
- W1: The first stage of electric auxiliary heating installed in the indoor unit.
- W2: The second stage of electric auxiliary heating installed in the indoor unit.
- The W signal of the outdoor unit is connected to the electric auxiliary heating or first-stage electric auxiliary heat.

The dotted line in the following thermostat wiring diagram indicates optional wiring (wiring for passive dehumidification and electric heating). For the wiring of the thermostat, refer to the user manual of the thermostat.

The reversing valve is energized in Heating mode and de-energized in Cooling mode. As factory default, the O/B terminal and reversing valve are set to be energized at the same time. Use dip switch SW2-4 to achieve the opposite.

Electrical-Low Voltage

11

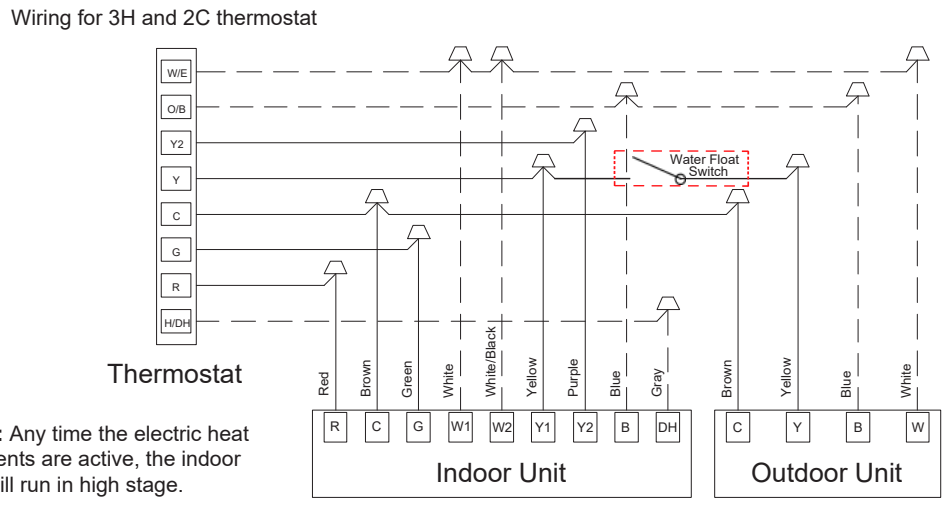

Note: Any time the electric heat elements are active, the indoor fan will run in high stage.

Figure 11.3. Control Wiring for Heat Pump Systems

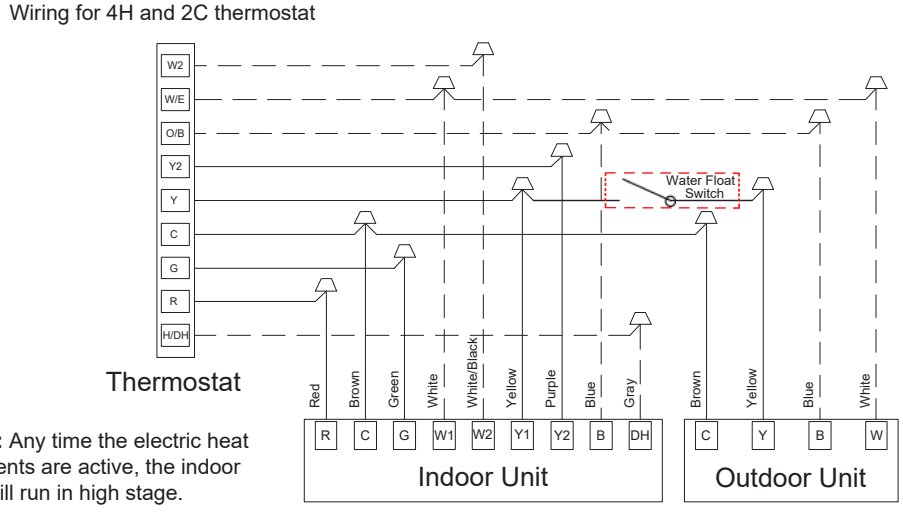

Note: Any time the electric heat elements are active, the indoor fan will run in high stage.

Figure 11.4. Control Wiring for Heat Pump Systems

Electrical-Low Voltage

11

Wiring for 3H and 1C thermostat

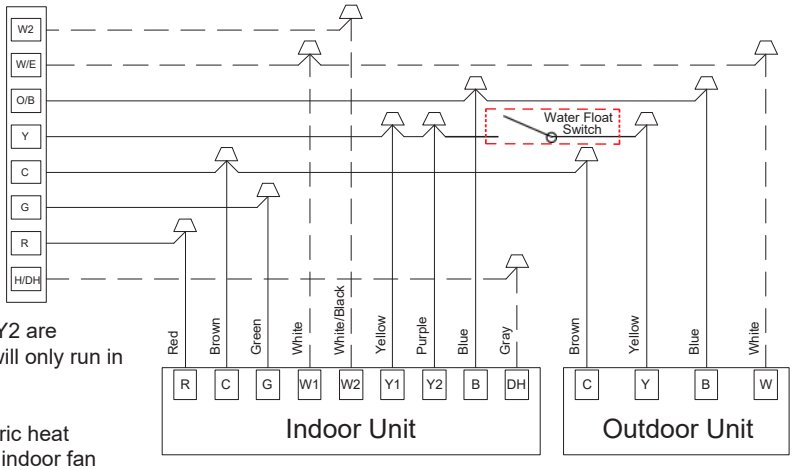

Note: Because Y1 and Y2 are jumped, the indoor fan will only run in high stage.

Note: Any time the electric heat elements are active, the indoor fan will run in high stage.

Figure 11.5. Control Wiring for Heat Pump Systems

Wiring for 2H and 2C thermostat

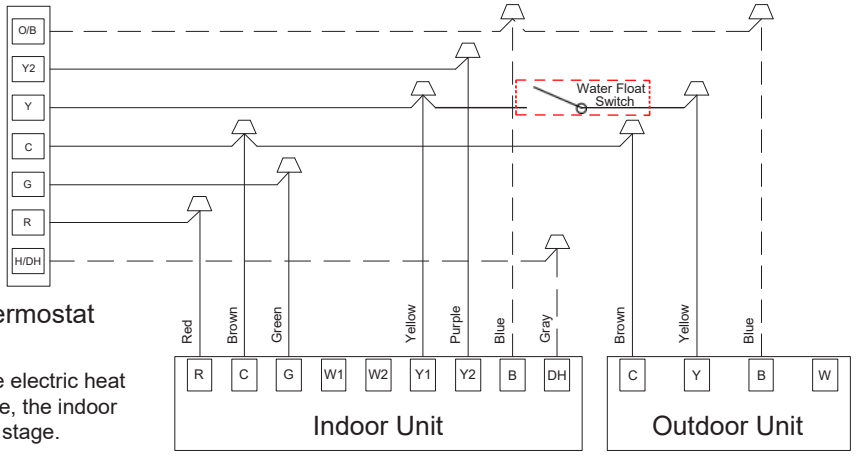

Note: Any time the electric heat elements are active, the indoor fan will run in high stage.

Figure 11.6. Control Wiring for Heat Pump Systems

Electrical-Low Voltage

11

Wiring for 1H and 1C thermostat

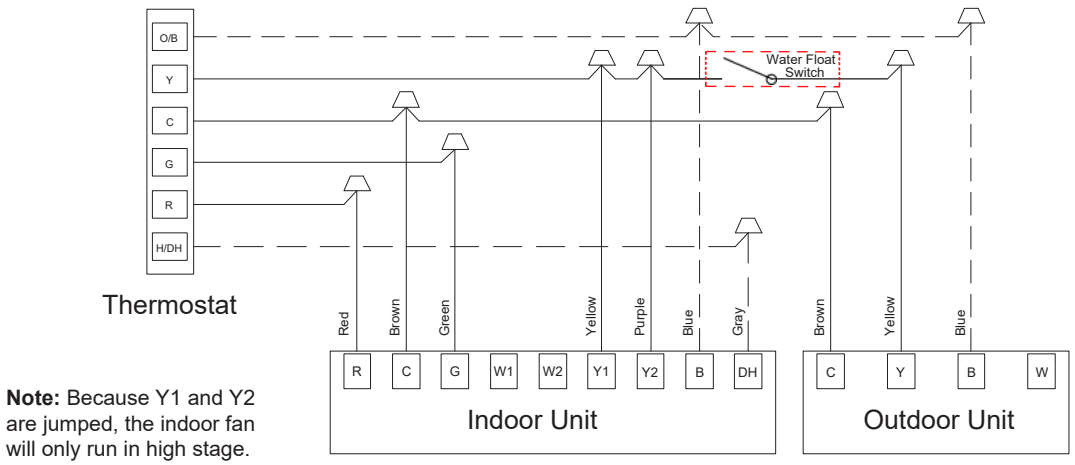

Note: Because Y1 and Y2 are jumped, the indoor fan will only run in high stage.

Figure 11.7. Control Wiring for Heat Pump Systems

Wiring for 2H and 1C thermostat

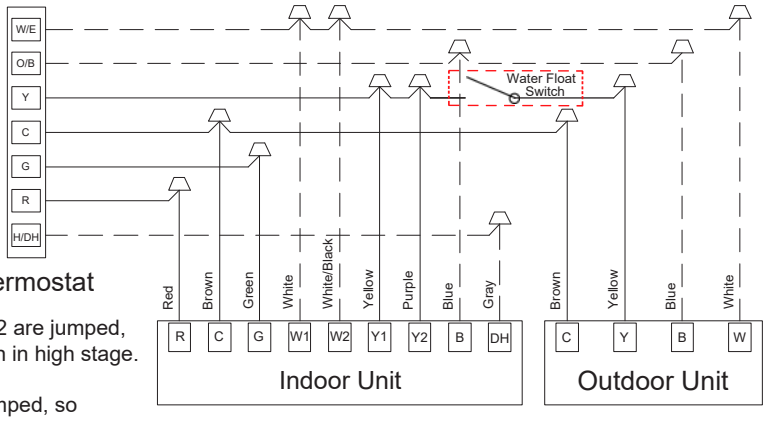

Note: Because Y1 and Y2 are jumped, the indoor fan will only run in high stage.

Note: W1 and W2 are jumped, so Electric Heat will only function in high stage.

Figure 11.8. Control Wiring for Heat Pump Systems

Electrical-High Voltage

12

High Voltage Power Supply

Warning: Live Electrical Parts

During the installation, testing, maintenance, and troubleshooting of this product, it may be necessary to use live electrical parts. Failure to observe all electrical safety precautions when exposed to live electrical parts may result in death or serious injury.

The high-voltage power supply must match the nameplate of the unit (208/230V, 1 ph, 60Hz).

Power supply wiring must comply with national, state, and local regulations.

Follow the instructions of the unit wiring diagram located at the back side of the control box access panel. Refer to the wiring diagram in this installation manual.

High Voltage Disconnect Switch

Install a separate disconnect switch on the outdoor unit.
High-voltage wiring must use a flexible electrical conduit supplied on site.

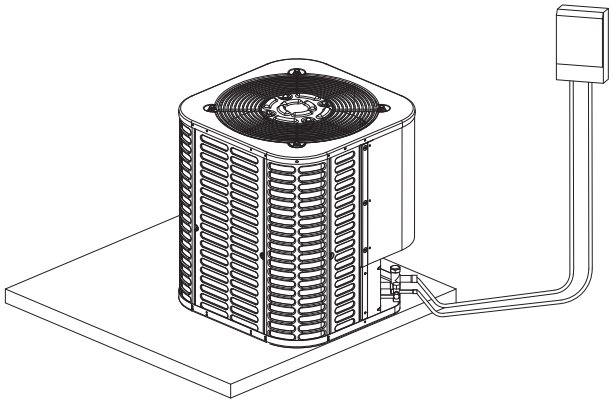

Figure 12.1.

Electrical-High Voltage

12

High Voltage Grounding

Ground the outdoor unit according to the requirements of national, state, and local regulations.

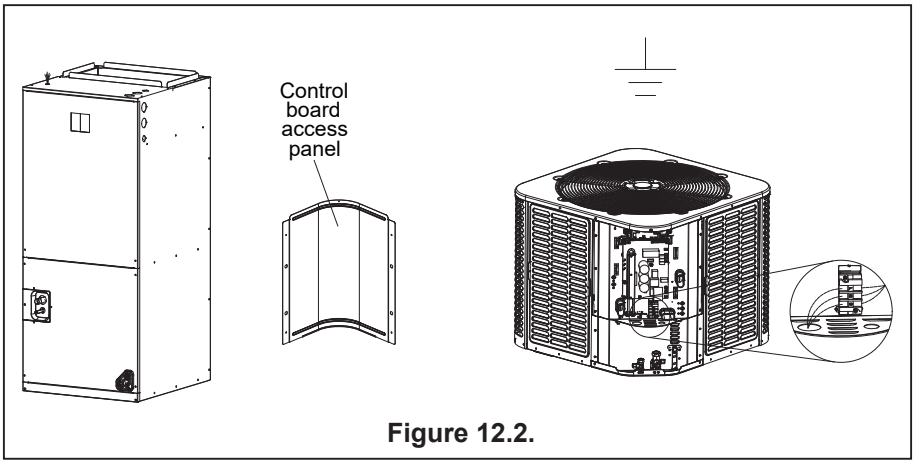

Figure 12.2.

Table 12.1. Wire Gauge of High Voltage Systems

Type (Btu/ hour)			24K	36K	48K	60K
Power		Stage	Single			
		Voltage/Frequency	208/230VAC, 60 Hz			
Wire Gauge	Indoor Unit Power Cord	Conductor Quantity	3	3	3	3
		Wire Diameter (AWG)	16	16	16	16
	Outdoor Unit Power Cord	Conductor Quantity	3	3	3	3
		Wire Diameter (AWG)	14	12	10	10

Start

13

System Startup

1. Turn off the system thermostat.



Figure 13.1.

3. Turn on the disconnect switch and apply power to the indoor and outdoor units.



Figure 13.2.

4. When starting the unit for the first time and the outdoor temperature is below 70°F (21°C), it is recommended to power on and let the crankshaft heater preheat for 1 hour before turning on the unit. When starting the unit for the first time in Heating mode while the outdoor temperature is below 23°F (-5°C), the system will force to preheat for 1 hour before turning on the unit. PRH will display in the screen.



Figure 13.3.

5. Turn on the system thermostat.



Figure 13.4.

System Refrigerant Charging Method 14

Refrigerant Charging: Weigh-In Method

Use the weigh-in method during the initial installation or when replacing a system charge. In addition, use the weigh-in method when power is not available to the equipment site or operating conditions (indoor/outdoor temperatures) are not in range to verify with the subcooling charging method.

The factory charge in the outdoor unit is sufficient for 25 feet (7.62 m) of standard size interconnecting liquid line. An additional 0.54 oz/ft of R-454B refrigerant is needed when the length of the lineset is more than 25 feet (7.62 m).

New Installation - Calculating additional charge for lineset greater than 25 feet (7.62 m).

1. Total length of line (m/ft) = _____ (a)
2. Standard line setup = 7.62 m (25 ft) (b)
3. (a) minus (b) = _____ (c)
4. Refrigerant multiplier = 50g/m (0.54 oz/ft) (d)
5. Additional refrigerant quantity (c*d) = _____ (e)*

* If the lineset is less than 7.62 m (25 ft), e = 0

Sealed-System Repairs - Calculating total system charge

1. Total length of line (ft) = _____ (a)
2. Standard line setup (ft) = 7.62 m (25 ft) (b)
3. (a) minus (b) = _____ (c)
4. Refrigerant multiplier = 50g/m (0.54 oz/ft) (d)
5. Additional refrigerant quantity (c*d) = _____ (e)*
6. Factory filling quantity (nameplate) = _____ (f)
7. Total system charge (e + f) = _____

* If the lineset is less than 7.62 m (25 ft), e = 0

The only mode approved for verifying system charging is in Forced Cooling mode. The outdoor temperature must be between 68-113°F (20-45°C). The indoor temperature must be between 68-89°F (20-32°C).

You can refer to the above formula for calculation or choose the appropriate refrigerant addition according to the piping length in the below examples.

Table 14.1. Additional Refrigerant Guidelines

Piping Length (ft/m)	Additional Charge (kg/oz)
25 / 7.6	0.0/0.0
50 / 15.2	0.4/13.5
75 / 22.9	0.8/27.0
100 / 30.5	1.1/40.5

System Refrigerant Charging Method 14

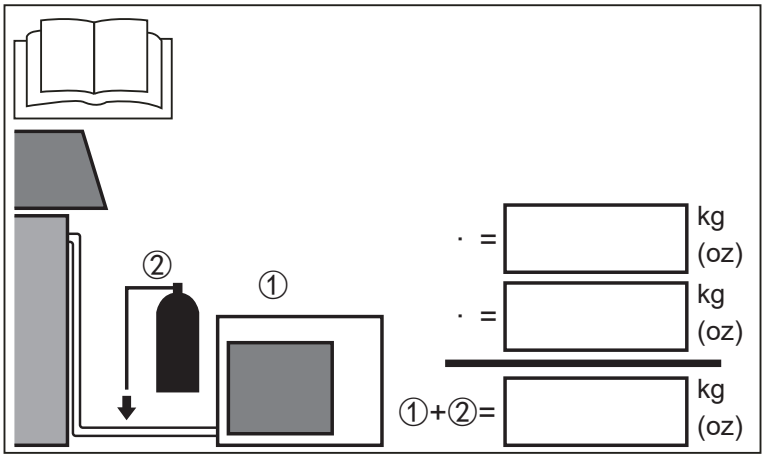

① Refrigerant charge of the precharged part of the appliance.
② Refrigerant charge added during installation.

Subcooling Charging & Refrigerant Adjustment in Cooling Mode

1. Check the outdoor ambient temperature.
Subcooling (Cooling mode) is the only recommended charging method when the outdoor ambient temperature is higher than 68°F (20°C).

For outdoor ambient temperature below 68°F (20°C), use the weigh-in charging method outlined earlier.

When the outdoor ambient temperature is higher than 68°F (20°C), be sure to return in spring or summer in order to accurately charge the system in Cooling mode.

Begin by checking the ambient temperature. Only use subcooling method (in Cooling mode) when the outdoor temperature is between 68-113°F (20-45°C) and the indoor temperature is between 68-89°F (20-32°C). If either temperature is out of the range, use the weigh-in method.

System Refrigerant Charging Method 14

Start Forced Cooling mode. Start the system in Cooling mode, then press and hold the "SET" button until the symbol "dC" is displayed. After entering the Forced Cooling mode, the symbol "dC" and the current compressor frequency will show alternatively on the digital display. The Forced Cooling mode will automatically stop after 60 minutes or press and hold the "SET" button again to exit the mode manually.



Press and hold the "SET" button until “dC” displays to start/quit Forced Cooling mode

Figure 14.1.

After Forced Cooling mode has started, wait 20 minutes for the system to stabilize. The compressor will maintain a specific frequency in Forced Cooling mode.

Begin by determining the optimum subcooling value, which is based on the measured liquid line temperature and pressure according to Table 14.2.

If the calculated subcooling value is lower than the recommended design subcooling value in Table 14.3., add refrigerant. If the calculated subcooling value is higher than the value shown in Table 14.3., recover refrigerant.

Wait 5 minutes for the system to stabilize and repeat the steps above until the subcooling value matches the design subcooling value shown in Table 14.3. After, remove the service tools, as well as press and hold the "SET" button to exit Forced Cooling mode. The symbol "dC" will disappear when exiting the Forced Cooling mode.

System Refrigerant Charging Method 14

Table 14.2.

Liquid Line Temp (°F/°C)	Subcooling Value (°F/°C)							
	6	7	8	9	10	11	12	13
	Liquid Gauge Pressure (PSI)							
55/13	164	167	170	172	175	178	181	184
60/15.5	178	181	184	187	191	194	197	200
65/18	194	197	200	203	206	210	213	217
70/21	210	213	217	220	223	227	230	234
75/24	227	230	234	238	241	245	249	252
80/27	245	249	252	256	260	264	268	272
85/29	264	268	272	276	280	284	288	292
90/32	284	288	292	297	301	305	309	314
95/35	305	309	314	318	323	327	332	336
100/38	327	332	336	341	346	351	355	360
105/40.5	351	355	360	365	370	375	380	385
110/43	375	380	385	390	396	401	406	412
115/46	401	406	412	417	422	428	433	439
120/49	428	433	439	445	450	456	462	468
125/52	456	462	468	474	480	486	492	498

Table 14.3.

Subcooling (°F/°C)		Ambient Temperature (°F/°C)				
		68~77/20~25	77~86/25~30	86~95/30~35	95~104/35~40	104~113/40~45
Model	24K	10±2	8±2	8±2	6±2	6±2
	36K	10±2	8±2	8±2	6±2	6±2
	48K	8±2	8±2	8±2	6±2	6±2
	60K	8±2	8±2	8±2	6±2	6±2

System Operation & Troubleshooting 15

Control Logic Description

- The inverter system adopts the same 24VAC control as any conventional heat pump.
- The compressor's speed is controlled based on coil pressures monitored by the unit's pressure transducer. In order to ensure stable and adequate capacity, the compressor speed modulates relative to the evaporator pressure during cooling operation and the condensing pressure during heating operation.

Sensors & Valves

T3: Outdoor Coil Temperature
— High temperature protection.
— Outdoor fan control (Cooling mode).
— Defrost control (Heating mode).

T4: ODU Ambient Temperature
— Maximum compressor frequency limitation.
— Defrosting condition (Heating mode).
— Outdoor fan control (Heating mode).

T5: Compressor Discharge Temperature
— High discharge temperature / Low superheat protection.
— Electronic Expansion Valve (EEV control).

T7: Control Board Heat Pipe Temperature
— Control board anti-condensed.

Tfin: IPM Radiator Temperature
— High IPM temperature protection.

PT: Pressure Transducer
— Detect evaporating pressure in Cooling mode and condensing pressure in Heating mode.
— Compressor frequency control.
— Electronic Expansion Valve (EEV control).
— High pressure protection (Heating mode).
— Low pressure protection (Cooling mode).

PEV: Pressure Equalizer Valve
— Balance the pressure of the system before the compressor starts up.
— Reversing valve.
— Used to switch the refrigerant flow direction between Cooling and Heating mode.

System Operation & Troubleshooting 15

Accelerated Cooling/Heating

The dip switch SW3-3 and SW3-4 are set to the "Off" position by default. If switch SW3-3 is set to the "On" position, the target coil temperature will reduce in Cooling mode. If switch SW3-4 is set to the "On" position, the target coil temperature will increase in Heating mode. The accelerated Cooling/Heating function improves dehumidification capacity in Cooling mode and increases unit capacity.

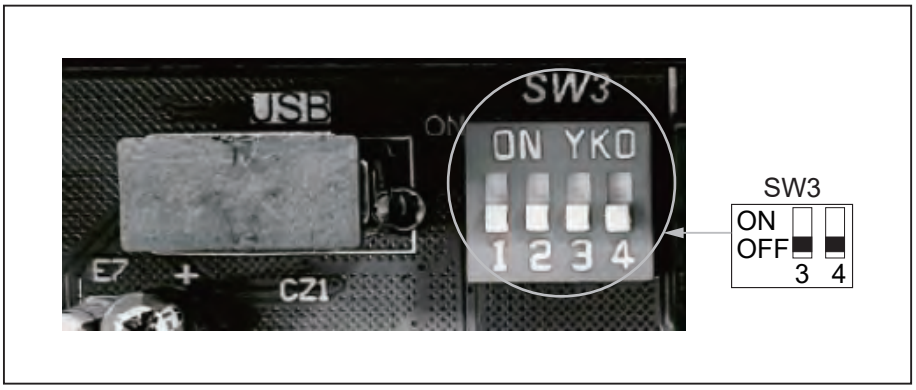

Defrost Description

Automatic Defrost Control Function

This function monitors the outdoor coil temperature (T3 and ambient temperature) (T4 to determine whether to defrost or not).

One of the following conditions must be met to run a defrost cycle:

1. The difference between the outdoor ambient temperature (T4) and outdoor coil temperature (T3) is called Delta T. When T4 ≥ 19°F (-7°C) =, the compressor has run for 60 minutes or under PI control for 15 minutes. When T3 < 30°F (-1°C) and Delta T < 46°F (8°C) lasts for 3 minutes, the unit will run a defrost cycle automatically.

2. When the compressor has run for 120 minutes under the low ambient temperature between 14-19°F (-10 - -7°C) and T3 < 5°F (-15°C) or the decreasing of T3 is beyond 5°F (-15°C), the unit will run a defrost cycle automatically.

3. When T4 ≤ 14°F:
   a) The compressor has run for 90 minutes and T3 ≤ -13°F (-25°C)
   b) The compressor has run for 90 minutes and the decreasing of T3 is beyond 5°F (-15°C)
   c) The compressor has run for 360 minutes

The unit will run a defrost cycle automatically.

System Operation & Troubleshooting 15

Defrost Description (Continued)

Minimum Run Time (MRT) Defrost
The MRT Defrost function is based on outdoor ambient temperature (T4). The function works if T3 is accidentally misjudged. One of the following conditions must be met to run a defrost cycle:

a) MRT ≥ 3.5 hours and T4 < 23°F (-5°C)
b) MRT ≥ 2 hours and 23°F (-5°C) ≤ T4 < 42°F (5.5°C)
c) MRT ≥ 50 minutes and the last defrost time ≥ 7 minutes.

Low Saturated Discharge Pressure (SDP) Defrost
The function works if T3 is accidentally misjudged. When the unit has run for 20 minutes under the ambient condition: 14°F (-10°C) ≤ T4 < 28°F (-2°C), monitor the Saturated Discharge Pressure (SDP). If the SDP drops below 82°F (28°C), the defrost function will run.

Fixed Time Defrost
When the dip switch SW2-1 is set to the "On" position, the Fixed Time Defrost mode will activate. For different geographical and ambient conditions, set dip switch SW2-2 to select the fix time for the defrost cycle. SW2-1 and SW2-2 are set to the "Off" position by default.

Accelerated Defrost
In this function, the Heating operation time is reduced by 10% and defrost time is extended for 60 seconds. Valid only in the Fixed Time Defrost and Minimum Run Time Defrost functions.

Manual Defrost
Press and hold the "▼" button on the display board until the "dF" symbol appears. The "dF" symbol and compressor frequency will display alternatively. The unit must operate in Heating mode for at least 5 minutes. This defrost function stops automatically. After the function stops, the display board will show the compressor speed (Hz).

O/B Signal
Check the default settings if the thermostat has O/B signal. The dip switch SW2-4 is set to the "Off" position by factory default, which requires a B signal call from the thermostat in Heating mode. When SW2-4 is turned on, the unit will operate in Cooling mode with an O signal from the thermostat.

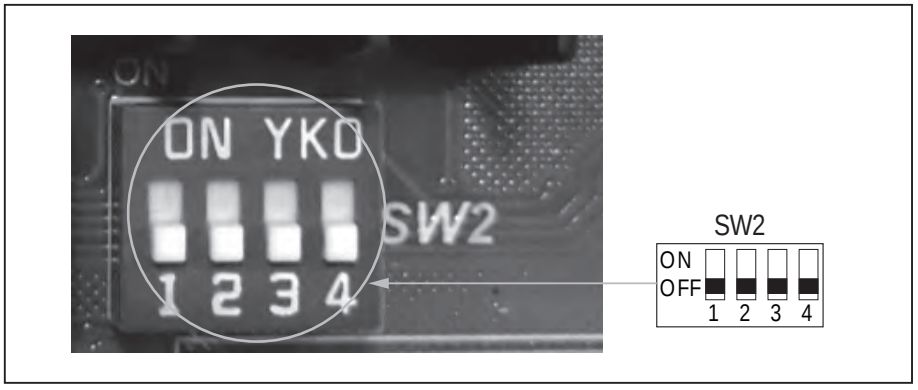

System Operation & Troubleshooting 15

Compressor Crankshaft Heater Control Function

1. Meet one of the following conditions to start the crankcase heater:
   - Discharge temperature T5 < 73.4°F (23°C) and the defrost function turns on.
   - Discharge temperature T5 < 73.4°F (23°C) when powered on for the first time.
   - The power off duration is longer than 3 hours or more than 2 hours when powered on for the first time.

And at this time T4 < 50°F (10°C) and the discharge temperature T5 < 73.4°F (23°C).

2. Exit conditions:
Discharge temperature T5 ≥ 82.4°F (28°C)

Reversing Valve Operation

▶ The reversing valve is energized in Heating mode and de-energized in Cooling mode.

During the heating signal of the first operation, the unit will operate in the cooling state for about 1 minute, accumulating pressure for reversing the reversing valve.

Defensive Function

Temperature Protection of the Outdoor Coil in Cooling Mode (T3)

1. If T3 > maximum set temperature, the system stops for protection.
2. If T3 < the set recovery temperature value, the system restarts.
Note: Consult the supplier for maximum temperature and recovery temperature.

Exhaust Temperature Protection (T5)

1. In Cooling or Heating mode, if the temperature is higher than the set maximum value, the system will stop for protection.
2. In Cooling or Heating mode, if the temperature is lower than the set recovery temperature, the system will restart.
Note: Consult the supplier for maximum temperature and recovery temperature.

IPM Module (Inverter) Protection (TF)

1. TF ≥ the highest judgment value C. If the outdoor fan does not reach the highest level at this time, the fan speed will increase one by one. At this time, the compressor frequency is not limited. If the outdoor fan is the highest fan speed, the current frequency is the highest allowable operating frequency.
2. TF ≥ the highest judgment value B, the compressor reduces the frequency successively.
3. TF ≥ the highest judgment value A, the compressor stands abnormally.
4. TF ≤ the highest judgment value D, the system restarts.

Note: The highest judgment value A/B/C/D are all parameters set in the program. Consult the supplier for specific values.

System Operation & Troubleshooting 15

Table 15.1.

Code	Failure and Protection
E1	Communication error (Indoor Unit)
E2	T1 sensor error
E3	T2 sensor error
E4	R-454b sensor error
E6	Refrigerant leakage error
E7	EEPROM failure (Indoor Unit)
E8	Fan motor error (Indoor Unit)
E9	Communication fault of wire control
F0	Communication failure (Outdoor Unit)
F4	T4 outdoor ambient temperature sensor error
F5	T5 exhaust temperature sensor error
F6	T3 condensing temperature sensor error
F7	T7 temperature sensor error
F8	T7 temperature sensor error in detecting condensate risks
F9	AC overvoltage/undervoltage protection
FA	EEPROM failure (Outdoor Unit)
FB	EEPROM failure of driver chip
FC	IPM modular sensor error
FD	HLP pressure sensor failure
FE	T3 or T5 sensor disconnect error
FF	HPS condenser sensor disconnected
P1	High pressure switch error
P2	Low pressure protection
P3	Inverter overcurrent protection

System Operation & Troubleshooting 15

P4	T5 exhaust temperature sensor high temperature protection
P5	T3 condenser sensor high temperature protection (Cooling mode)
P6	IPM protection
P7	T2 freeze protection
P8	IPM high temperature protection (Tf)
P9	DC fan motor error
PC	Wet operation error
PD	High pressure abnormal error (Heating mode)
H0	Communication fault of master board and driver chip
H1	T3 sensor high temperature error (Cooling mode) (3 times P5 error within 180mins)
H2	High pressure switch error (3 times P1 error within 150 mins)
H3	High pressure abnormal in Heating mode (3 times PD error within 180 mins)
H4	IPM modular high temperature error (3 times P8 within 120 mins)
H5	Low pressure error (5 times P2 within 240 mins)
H6	Discharge temperature abnormal error (3 times P4 within 100 mins)
H7	Wet operation error (3 times PC within 200 mins)
H8	T3 condenser sensor disconnect error (3 times FE within 120 mins)
HC	Discharge temperature sensor disconnect error (3 times FE within 180 mins)
HE	Condensate error (3 times F8 within 60 mins)
L0	DC cable bus low voltage protection
L1	DC cable bus high voltage protection
LA	Frequency limitation by voltage
LB	Frequency limitation or decline by high pressure
LC	Frequency limitation by condenser temperature
LD	Frequency limitation by discharge temperature
LE	Frequency limitation by IPM modular high temperature
LF	Frequency limitation by current
d0	Oil return
df	Defrost
dC	Force cooling
ATL	Overtemperature protection
PRH	Crankcase heater preheating, can not start

System Operation & Troubleshooting 15

Capacity Configuration Selection

System software will recall performance setting parameters according to the DIP switch selection. The DIP should be set according to the matched IDU.

Mode	SW3-1	SW3-2	Remark
2 Ton	Off	On	
3 Ton	Off	Off	Factory default
4 Ton	On	Off	
5 Ton	On	On	Factory default

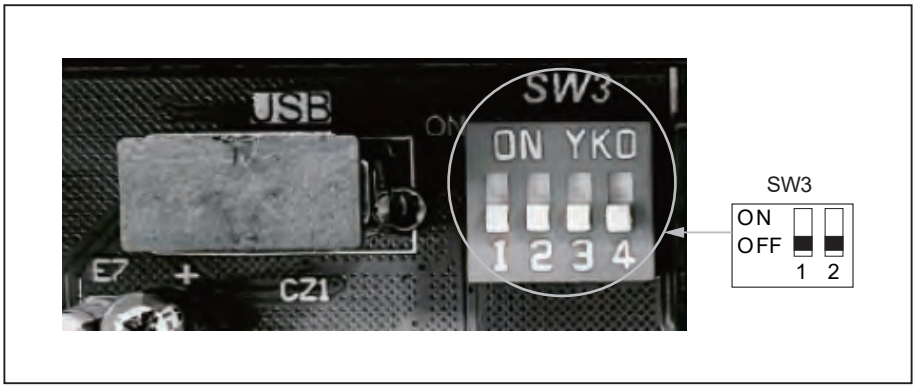

System Operation & Troubleshooting 15

SW1 DIP Switch Description

For the 24V thermostat to control the unit, turn off dip switch SW1-1. For RS485 communication mode, turn on dip switch SW1-1. The RS-485 communication mode is only valid for manufacturer-approved match indoor and outdoor systems. The manufacturer supplied RS-485 communicative thermostat is optional. The benefits of the RS-485 communication mode:

- Modulates compressor speed for indoor temperature to achieve higher energy efficiency and comfort.
- Error codes display on the thermostat.
- Allows the end user to remotely control the system via the manufacturer's app.

The dip switch SW1-2 is for selecting the unit's display temperature and pressure.
The dip switch SW1-3 is for switching between Cool Only (AC) and Heat Pump (HP).

USB Port Software Update

Dip switch SW1-4 is for the USB Port Software Update function.

1. Turn off the power supply.
2. Turn on dip switch SW1-4.
3. Insert the USB flash drive into the USB port.
4. Turn the power supply back on.
5. The LED display will show the symbol "1".
6. After the symbol displays, turn the SW1-4 dip switch back off.
7. The LED display will show the symbols "2" and "3".
8. After the update is completed, the symbol "8.8.8" will appear on the LED display, then disappear.

	SW1-1	SW1-2	SW1-3	SW1-4
On	RS-485	°C & MPa	AC	USB Port Software Update
Off	24V thermostat (Factory default)	°F & PSI (Factory default)	HP (Factory default)	Software Update (Factory default)

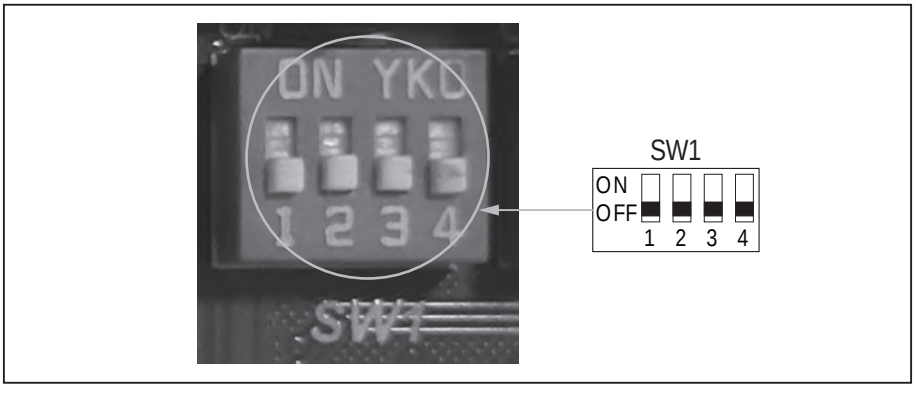

System Operation & Troubleshooting 15

Press the "CHK" (K4) button to display and run through the series of parameters available. After pressing the "CHK" button, the unit will display the parameter number. After 1 second, the unit will display the value of the parameter. Pressing the "CHK" button again will advance to the next parameter number. (Refer to Table 15.2.)

▲: Check button and set the parameter "+"

▼: Check button and set the parameter "-"

Table 15.2.

Check Table			
No.	Display content	20	AC current (A; Actual value)
00	Unit type: 0 = top discharge unit; 1 = side discharge unit; 2 = rooftop unit	21	Compressor current
01	Outdoor power (Model)	22	Oil output (CC; Actual value)
02	Running mode (0: Standby mode; 2: Cooling mode; 3: Heating mode)	23	T1 indoor ambient temperature (°F; Actual value)
03	Target frequency (Hz; Actual value)	24	T2 indoor evaporator temperature (°F; Actual value)
04	Actual frequency (Hz; Actual value)	25	Concentration value
05	Running frequency (Hz; Actual value)	26	Enter PI control sign (0 or 1)
06	T3 condensing temperature (°F; Actual value)	27	Enter defrosting type
07	T4 outdoor ambient temperature (°F; Actual value)	28	Test mode (1-40; Mode gear)
08	T5 exhaust temperature (°F; Actual value)	29	Frequency increase (Shift; Actual value)
09	Temperature transform by pressure sensor (°F; Actual value)	30	△EV (step; Actual value)
10	IPM modular temp Tip_m (°F; Actual value)	31	PFC control state
11	Target temp Ttrg (°F; Actual value)	32	Frequency limit item
12	Discharge temp superheat (°F; Actual value)	33	Driving failure code subdivision 1
13	Target superheat (°F; Actual value)	34	Driving failure code subdivision 2
14	Fan speed (Actual value / 10)	35	Last failure or protection code
15	EXV opening degree (step; Actual value)	36	Software version number (1-255)
16	Pressure value (PSI; Actual value)	37	T7 condensing temperature (°F; Actual value)
17	Pressure valve transform by T3 (PSI; Actual value)	38	T30 temperature (°F; Actual value)
18	AC voltage (VAC; Actual value)	39	Compression ratio
19	DC voltage (VDC; Actual value)		

System Operation & Troubleshooting 15

Overview of Main Control Board

Outdoor Main Control Board

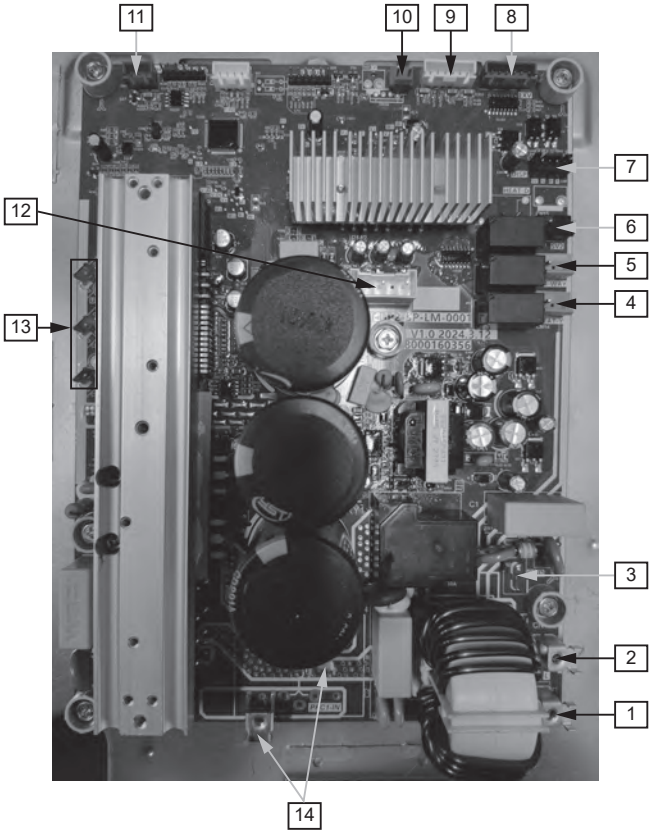

No.	Functional description
1	Power supply input L (L1)
2	Power supply input N (L2)
3	Ground wire
4	Crankshaft heating port
5	Four-way valve port
6	Solenoid valve port
7	Display board port
8	Electronic expansion valve (EEV) port
9	T3 T4 TP sensor port
10	High pressure protection switch port
11	Pressure sensor port
12	DC motor port
13	Compressor port U V W
14	Reactor port

Figure 15.1. 5P Outdoor Main Control Board

System Operation & Troubleshooting 15

Overview of Main Control Board (Continued)

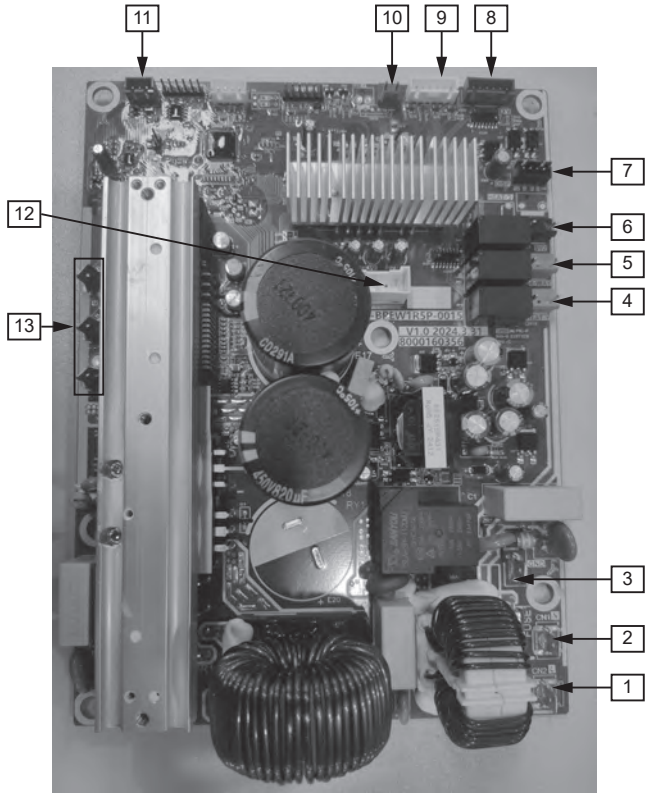

No.	Functional description
1	Power supply input L (L1)
2	Power supply input N (L2)
3	Ground wire
4	Crankshaft heating port
5	Four-way valve port
6	Solenoid Valve port
7	Display board port
8	Electronic expansion valve (EEV) port
9	T3 T4 TP sensor port
10	High pressure protection switch port
11	Pressure sensor port
12	DC motor port
13	Compressor port U V W

Figure 15.2. 3P Outdoor Main Control Board

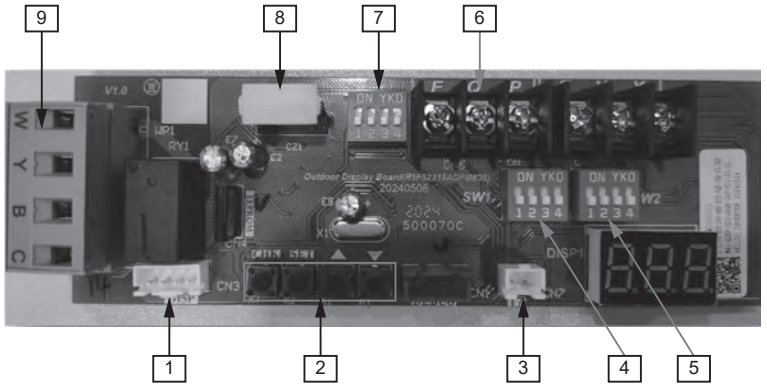

No.	Functional description
1	Display board port
2	Switch (K1 K2 K3 K4)
3	T7 sensor port
4	Dip switch SW1
5	Dip switch SW2
6	RS-485 communication port
7	Dip switch SW3
8	USB port
9	24V communication port

Figure 15.3. Display Board

System Operation & Troubleshooting 15

Troubleshooting for Error Codes

Warning: Dangerous Voltage
When measuring the resistance, ensure that the unit's power is turned off and wait for 3 minutes before measuring.

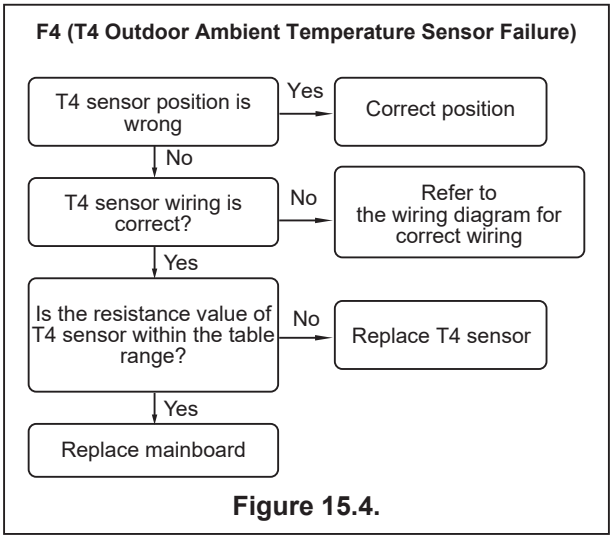

Figure 15.4.

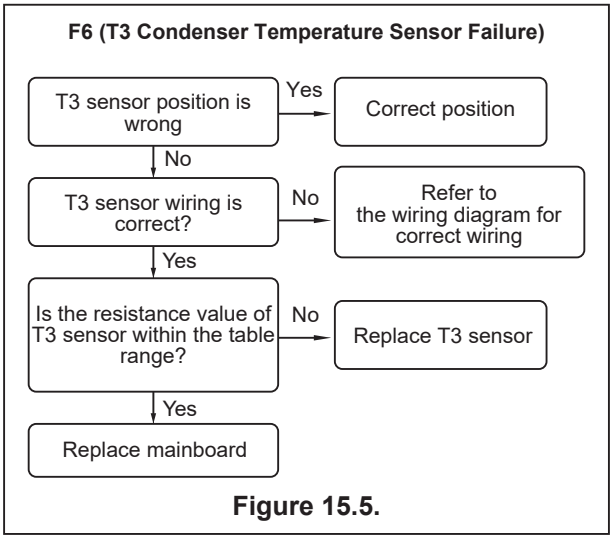

Figure 15.5.

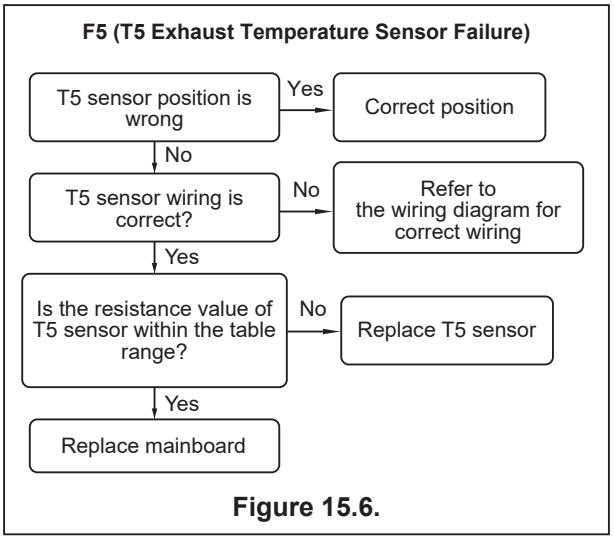

Figure 15.6.

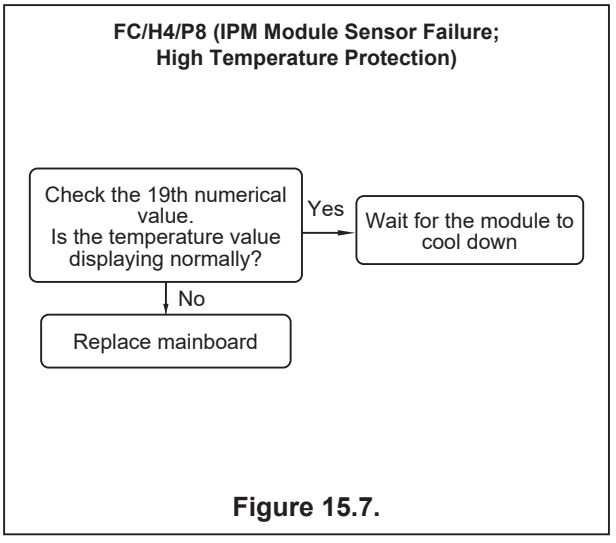

Figure 15.7.

System Operation & Troubleshooting 15

Troubleshooting for Error Codes (Continued)

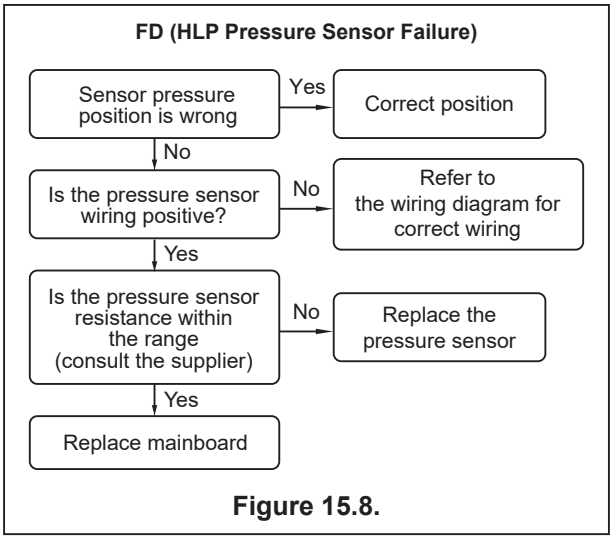

Figure 15.8.

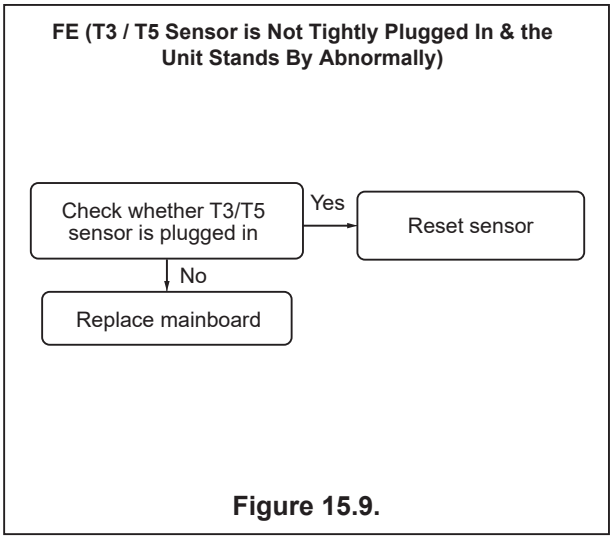

Figure 15.9.

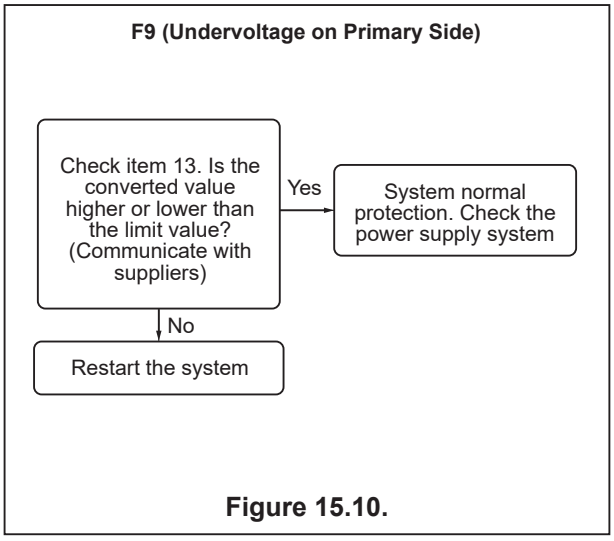

Figure 15.10.

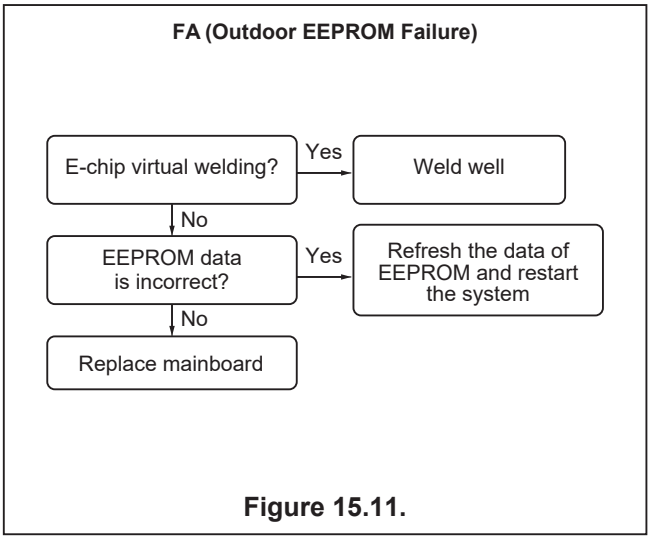

Figure 15.11.

System Operation & Troubleshooting 15

Troubleshooting for Error Codes (Continued)

H0 (Communication Failure Between Main Control Chip and IPM Chip)

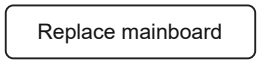

Figure 15.12.

H2/P1 (High Pressure Switch Protection)

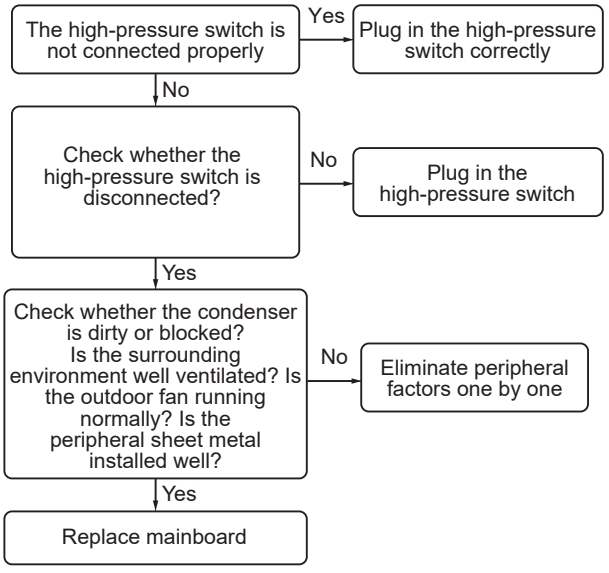

Figure 15.13.

H3/PD (High Pressure Abnormal Failure Protection in Heating Mode)

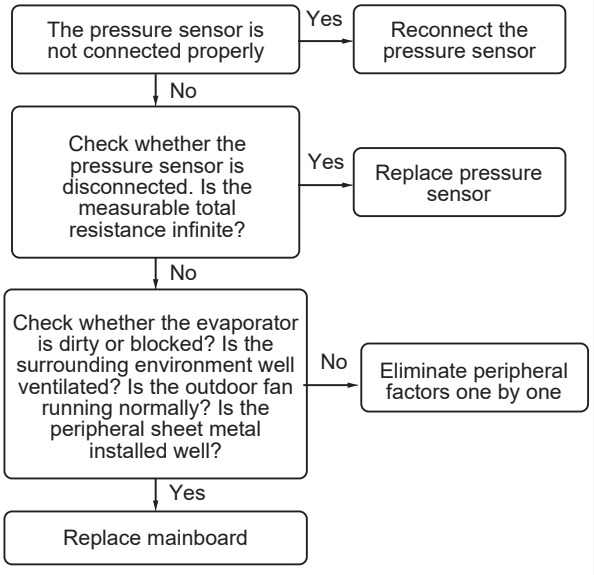

Figure 15.14.

H5/P2 (Low Pressure Abnormal Failure Protection)

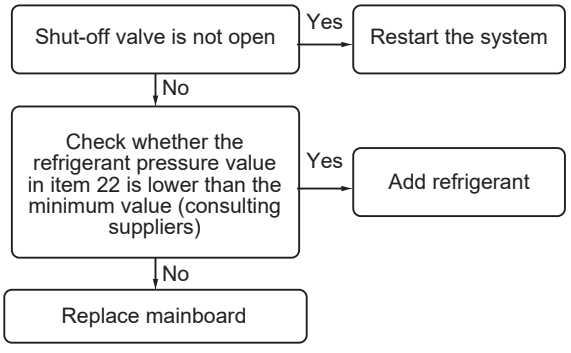

Figure 15.15.

PC/H7 (Wet Operation Abnormal Protection)

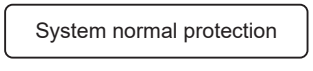

Figure 15.16.

P6 (IPM Module Protection)

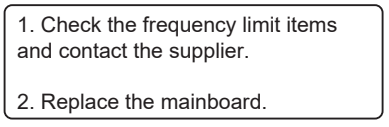

Figure 15.17.

System Operation & Troubleshooting 15

Troubleshooting for Error Codes (Continued)

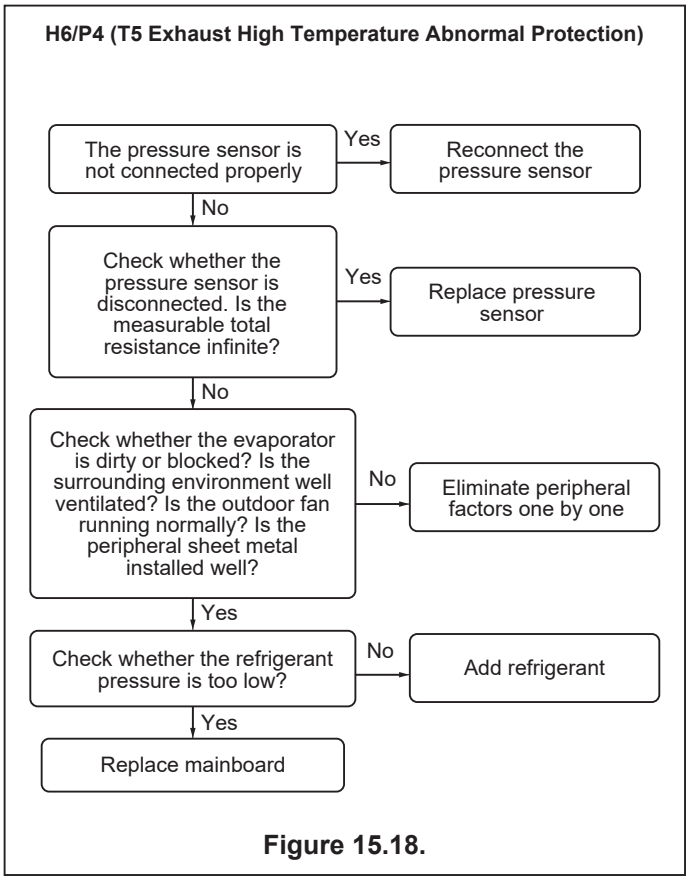

Figure 15.18.

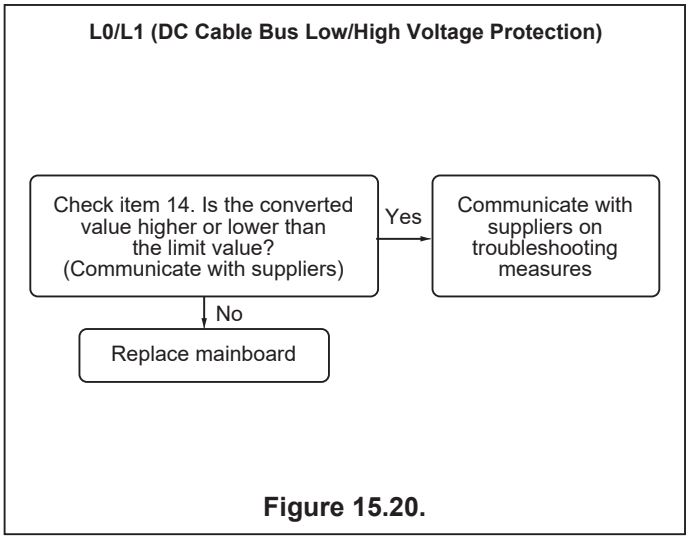

Figure 15.20.

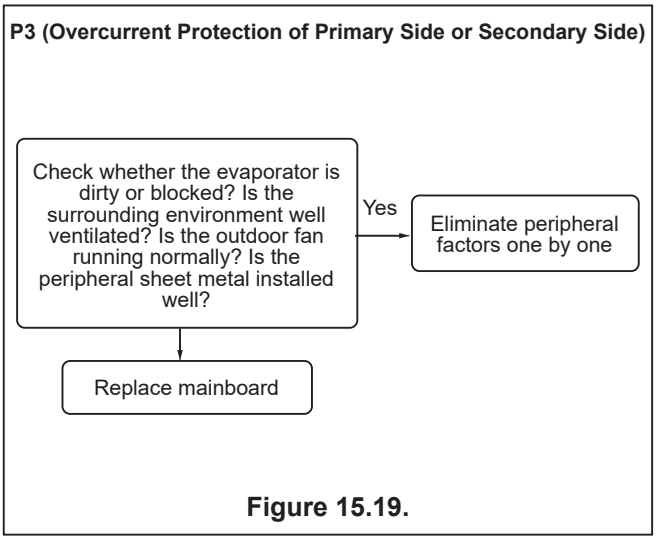

Figure 15.19.

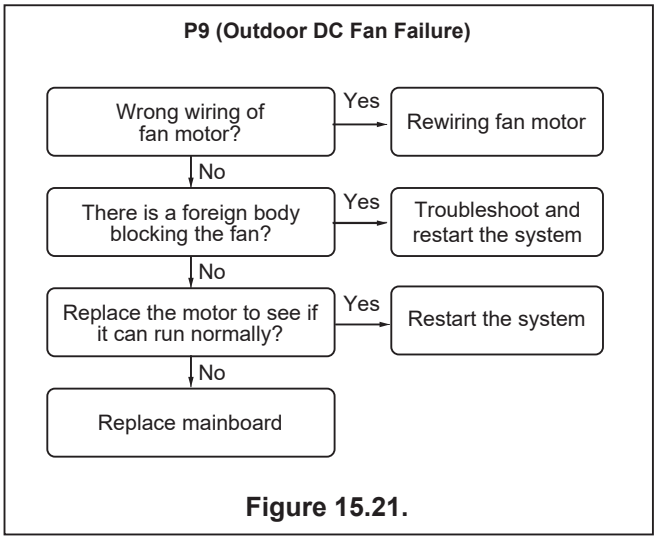

Figure 15.21.

System Operation & Troubleshooting 15

Temperature-Resistance Relationship Table (For T3, T4, T7 Sensor)

Table 15.3. for T3, T4, T7

Temperature °F	Temperature °C	Electric Resistance kΩ	Volt DC	Temperature °F	Temperature °C	Electric Resistance kΩ	Volt DC
-5	-20.6	33.367	0.57	90	32.2	3.865	2.63
0	-17.8	29.227	0.64	95	35	3.508	2.75
5	-15	25.657	0.72	100	37.8	3.187	2.87
10	-12.2	22.595	0.80	105	40.6	2.900	2.99
15	-9.4	19.942	0.89	110	43.3	2.652	3.09
20	-6.7	17.697	0.98	115	46.1	2.421	3.20
25	-3.9	15.673	1.08	120	48.9	2.214	3.30
30	-1.1	13.917	1.18	125	51.7	2.025	3.40
40	4.4	11.060	1.40	130	54.4	1.861	3.49
45	7.2	9.867	1.52	135	57.2	1.706	3.58
50	10	8.823	1.64	140	60	1.567	3.66
55	12.8	7.884	1.76	145	62.8	1.442	3.74
60	15.6	7.101	1.89	150	65.6	1.327	3.82
65	18.3	6.409	2.01	155	68.3	1.226	3.89
70	21.1	5.767	2.14	160	71.1	1.132	3.96
75	23.9	5.150	2.28	165	73.9	1.046	4.02
80	26.7	4.700	2.39	170	76.7	0.967	4.08
85	29.4	4.266	2.51				

System Operation & Troubleshooting 15

Temperature-Resistance Relationship Table (For T5 Sensor)

Table 15.4. for T5

Temperature °F	Temperature °C	Electric resistance kΩ	Volt DC	Temperature °F	Temperature °C	Electric resistance kΩ	Volt DC
-5	-20.6	496.38	0.08	140	60	12.348	1.97
0	-17.8	422.97	0.09	145	62.8	11.164	2.10
5	-15	361.35	0.11	150	65.6	10.106	2.22
10	-12.2	309.74	0.13	155	68.3	9.193	2.34
15	-9.4	266.152	0.15	160	71.1	8.344	2.46
20	-6.7	230.462	0.17	165	73.9	7.585	2.58
25	-3.9	198.968	0.19	170	76.7	6.904	2.69
30	-1.1	172.231	0.22	175	79.4	6.313	2.80
35	1.7	149.467	0.26	180	82.2	5.761	2.92
40	4.4	130.642	0.29	185	85	5.263	3.02
45	7.2	113.87	0.33	190	87.8	4.815	3.13
50	10	99.456	0.37	195	90.6	4.410	3.23
55	12.8	87.095	0.42	200	93.3	4.057	3.33
60	15.6	76.425	0.48	205	96.1	3.724	3.42
65	18.3	67.501	0.53	210	98.9	3.423	3.51
70	21.1	59.457	0.60	215	101.7	3.149	3.60
75	23.9	52.489	0.67	220	104.4	2.910	3.67
80	26.7	46.429	0.74	225	107.2	2.689	3.75
85	29.4	41.322	0.82	230	110	2.476	3.82
90	32.2	36.682	0.90	235	112.8	2.288	3.89
95	35	32.619	0.99	240	115.6	2.117	3.96
100	37.8	29.068	1.09	245	118.3	1.965	4.02
105	40.6	25.948	1.19	250	121.1	1.821	4.08
110	43.3	23.291	1.29	255	123.9	1.690	4.13
115	46.1	20.855	1.39	260	126.7	1.569	4.19
120	48.9	18.708	1.51	265	129.4	1.462	4.23
125	51.7	16.809	1.62	270	132.2	1.360	4.28
130	54.4	15.184	1.73	275	135	1.266	4.32
135	57.2	13.682	1.85	280	137.8	1.180	4.36

Wiring Diagram

16

802035000124

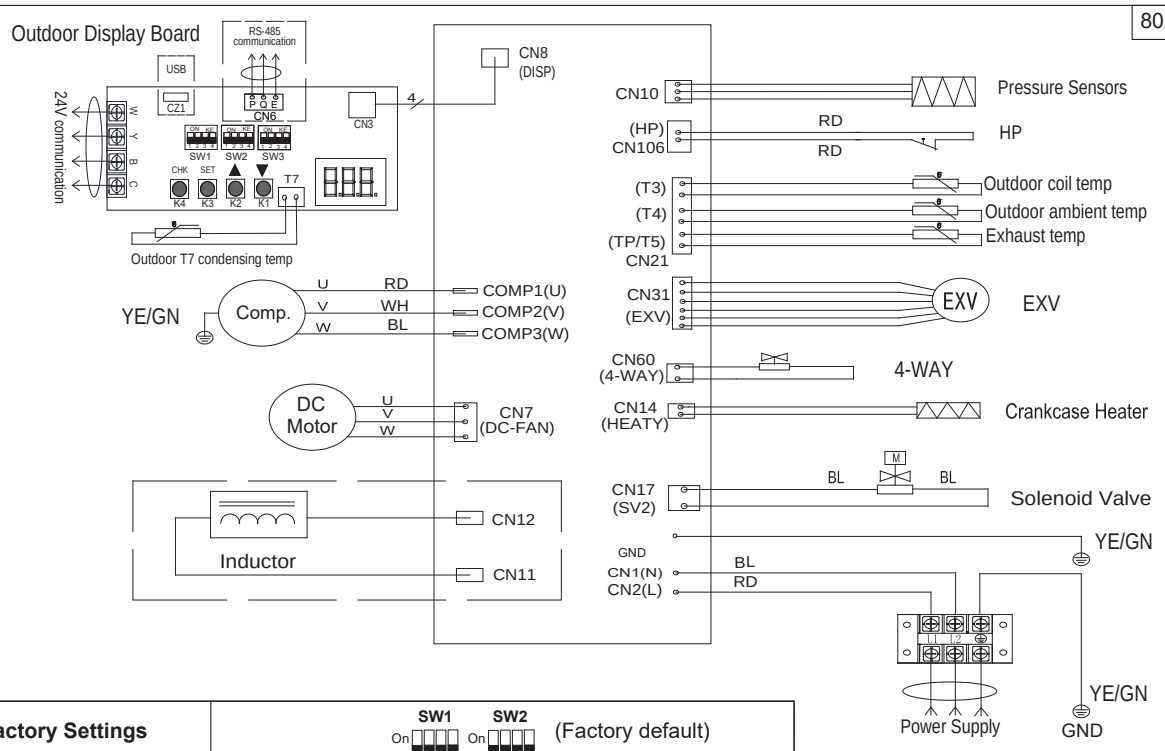

Factory Settings		SW1 On / SW2 On (Factory default)	
Model		**Check**	
SW1-1	On	RS-485 communication mode	
	Off	24V control (factory default)	
SW1-2	On	Display unit: ℃ & Mpa	
	Off	Display unit: ℉ & PSI (factory default)	
SW1-3	On	System operation mode: Cooling only	
	Off	System operation mode: Heat pump (factory default)	
SW1-4	On	USB upgrade	
	Off	Reserved (factory default)	
SW2-1	On	Fix timed defrost	Defrosting control mode
	Off	Auto defrost (factory default)	
SW2-2	On	Timer 30 min	
	Off	Timer 60 min (factory default)	
SW2-3	On	Powerful defrosting	
	Off	Normal (factory default)	
SW2-4	On	Thermostat O/B signal is opposite	
	Off	Normal (factory default)	
SW3-3	On	Accelerated cooling	
	Off	Normal cooling (factory default)	
SW3-4	On	Accelerated heating	
	Off	Normal heating (factory default)	

Factory Settings		
SW3-1	**SW3-2**	**Mode**
Off	On	24K (2T)
Off	Off	36K (3T)
On	Off	48K (4T)
On	On	60K (5T)

Wire Color Code

RD (RED)	OR (ORANGE)	BK (BLACK)
BR (BROWN)	BL (BLUE)	GN (GREEN)
PR (PURPLE)	WH (WHITE)	GY (GREY)
YE (YELLOW)		

Wire Information

Factory Connection

Project Connection

Dashed Circle (Optional)

Note 1: — — — —

The wiring diagram is for explanation purpose only and the actual shape of the components may be different.

Note: For reference only, the actual wiring diagram shall prevail.

Wiring Diagram

16

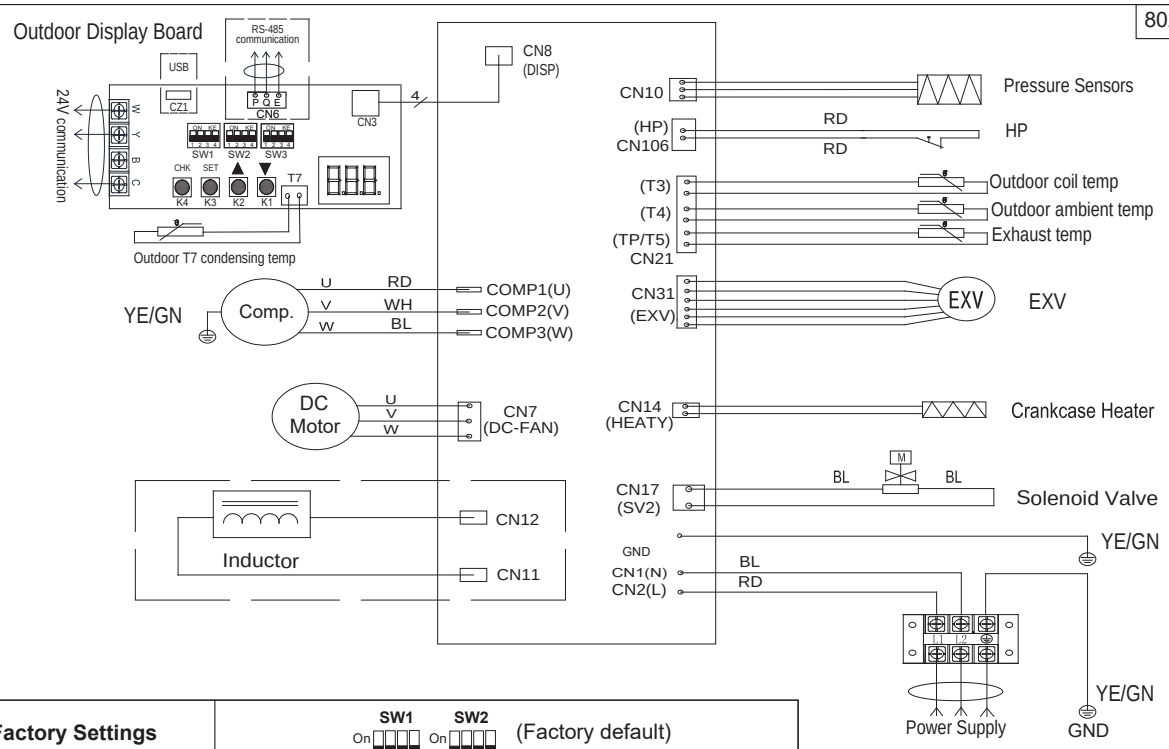

Factory Settings		SW1 On / SW2 On (Factory default)
Model		**Check**
SW1-1	On	RS-485 communication mode
	Off	24V control (factory default)
SW1-2	On	Display unit: °C & Mpa
	Off	Display unit: °F & PSI (factory default)
SW1-3	On	System operation mode: Cooling only (factory default)
	Off	System operation mode: Heat pump
SW1-4	On	USB upgrade
	Off	Reserved (factory default)
SW2-1	On	Fix timed defrost
	Off	Auto defrost (factory default)
SW2-2	On	Timer 30 min
	Off	Timer 60 min (factory default)
SW2-3	On	Powerful defrosting
	Off	Normal (factory default)
SW2-4	On	Thermostat O/B signal is opposite
	Off	Normal (factory default)
SW3-3	On	Accelerated cooling
	Off	Normal cooling (factory default)
SW3-4	On	Accelerated heating
	Off	Normal heating (factory default)

Defrosting control mode

Factory Settings		
SW3-1	**SW3-2**	**MODE**
Off	On	24K (2T)
Off	Off	36K (3T)
On	Off	48K (4T)
On	On	60K (5T)

Wire Color Code

RD (RED)	OR (ORANGE)	BK (BLACK)
BR (BROWN)	BL (BLUE)	GN (GREEN)
PR (PURPLE)	WH (WHITE)	GY (GREY)
YE (YELLOW)		

Wire Information

Factory Connection
Project Connection
Dashed Circle (Optional)

Note 1: — —— —

The wiring diagram is for explanation purpose only and the actual shape of the components may be different.

Note: For reference only, the actual wiring diagram shall prevail.

Cleaning & Maintenance 17

Cleaning Precautions

Warning:

- Qualified maintenance personnel must carry out the maintenance and cleaning of the outdoor units.

Caution: Electric Shock

- Before cleaning or maintenance, turn off the unit and disconnect the power supply.

Note:

- Do not use chemicals or chemically treated clothes to clean the unit.
- Do not use benzene, paint thinner, polishing powder, or other solvents to clean this unit.

Be Careful:

- When removing the filter, do not touch the metals parts in the unit. The sharp metals edges can cut cut.

Pre-Season Inspection & Maintenance

Complete the following at the start of each Heating or Cooling season:



Turn off the unit and disconnect the power supply





Check for damaged wires and leaks



Make sure that all air inlets and outlets are not blocked

Table 17.1.

Water Float Switch Wiring 18

RS-485 Communication Mode

The indoor and outdoor units connect to 3 communication lines, P.Q.E. Connect the water float switch between the "P" communication line. Terminal P's communication line first passes through the water float switch, then to Terminal P of the outdoor unit.

Refer to the following figure for wiring:

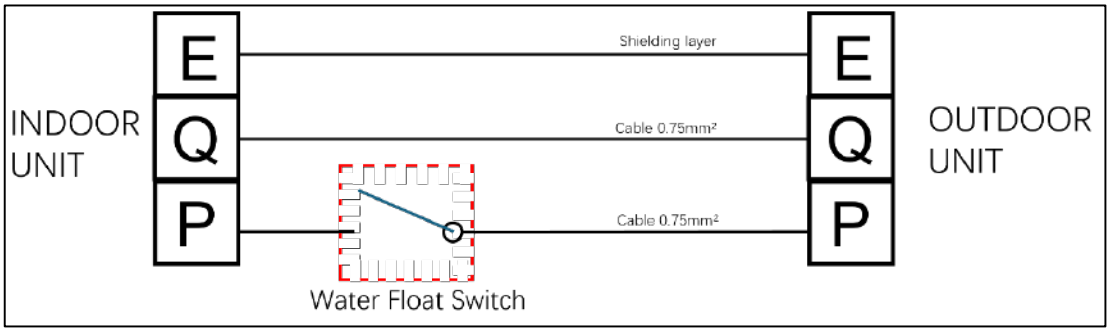

24V Communication Mode

The indoor and outdoor units connect with R/C/Y/B/G via the 24V thermostat. The R terminal is a 24V power supply. Connect the water float switch to the R signal between the thermostat and indoor unit. When the water float switch is in overcurrent state, the 24V power supply R and the Y signal of the compressor will disconnect, causing the compressor to stop operating.

Refer to the following figure for wiring:

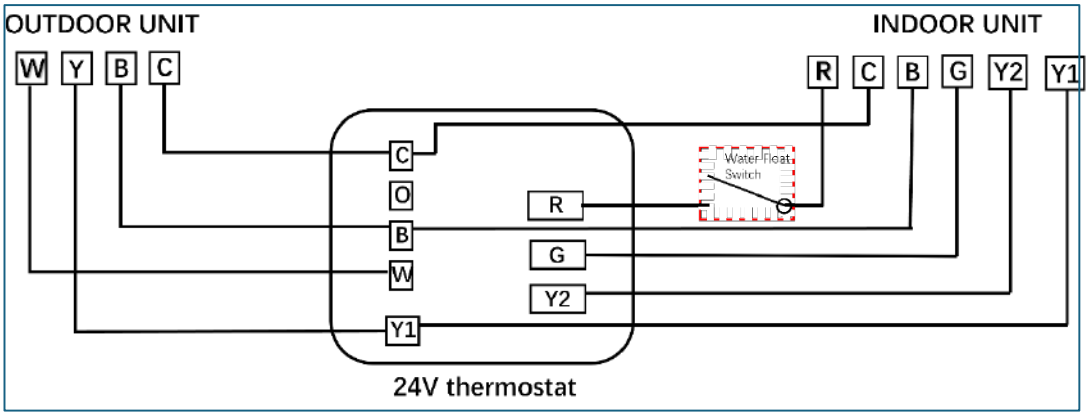

RS-485 Wiring & Thermostat

19

RS-485 Communication Wiring

1) Set the dial switch of the indoor and outdoor units to RS-485 communication mode

Turn the SW1-1 dial switch on the indoor mainboard and the SW1-1 dial switch on the ODU display board to the "On" position.

Indoor Unit

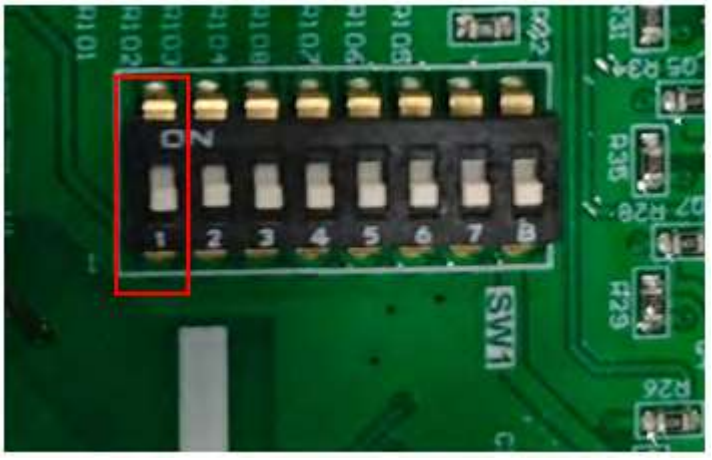

SW1-1	ON	RS-485 communication mode
	OFF	24V control (factory default)

RS-485 Wiring & Thermostat

19

Outdoor Unit

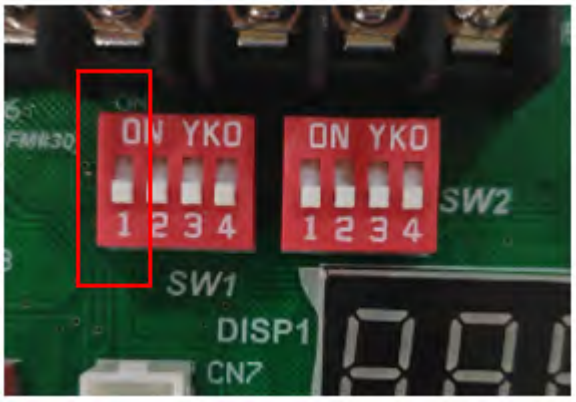

SW1-1	ON	RS-485 communication mode
	OFF	24V control (factory default)

2) Connect RS-485 Communication Wire
Connect the indoor and outdoor units, P-P, Q-Q, E-E one by one. Use 2-core shielded wires, with the shielding layer of the cable connected to E.

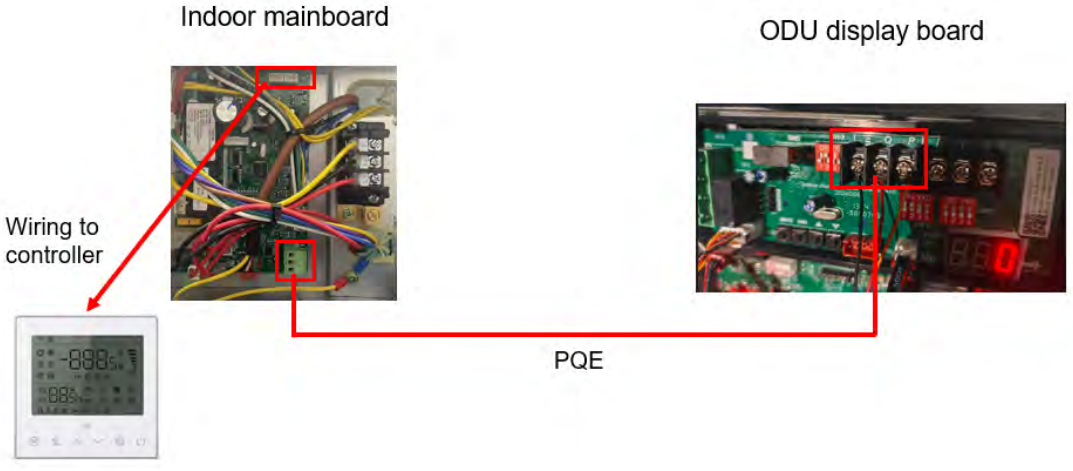

Note: The wired controller communication cable is provided by the factory. The PQE communication cables for the IDU and ODU need to be purchased by the customer in the local market.

RS-485 Communication Wiring 19

3) 12V Wire Controller



M	**Mode:** Set the mode of the air conditioner.
^ v	**TEMP+ and TEMP-** Set the setpoint of the air conditioner.
	Fan speed: Set different fan speeds of air conditioner.
	On/Off: Start-up and shut-down of air conditioner.
	Function: Set the timing start-up and shutdown, check mode, filter cleaning, and child lock, etc.

Note: For detailed operating instructions, refer to the wire controller manual.

Product Disposal Guidelines 20

Product Disposal Guidelines

This appliance contains refrigerant and other potentially hazardous materials. When disposing the appliance, the law requires special collection and treatment. Do not dispose this product as household waste or unsorted municipal waste.

Remove all refrigerant and oil prior to disposal as outlined within this manual.

When disposing of this appliance, the following options are available:

- Dispose of the appliance at a designated municipal electronic waste collection facility.
- When buying a new appliance, the retailer will take back the old appliance free of charge.
- The manufacturer will take back the old appliance free of charge.
- Sell the appliance to certified scrap metal dealers.

Special Notice

Disposing of this appliance improperly, or in other natural surroundings, endangers your health and is bad for the environment. Hazardous substances may leak into the ground water and enter the food chain. Follow proper disposal protocols.

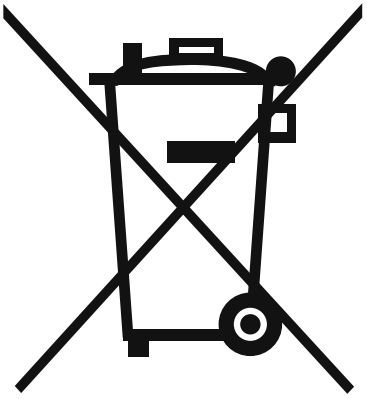

Appendix A

If Refrigerant Has Been Added to the System During Installation

(For the Installer) fill in the following:

1) The factory refrigerant charge of the product (located on the outdoor unit nameplate).
2) The additional refrigerant charged into the product.
1+2) The total refrigerant charge.

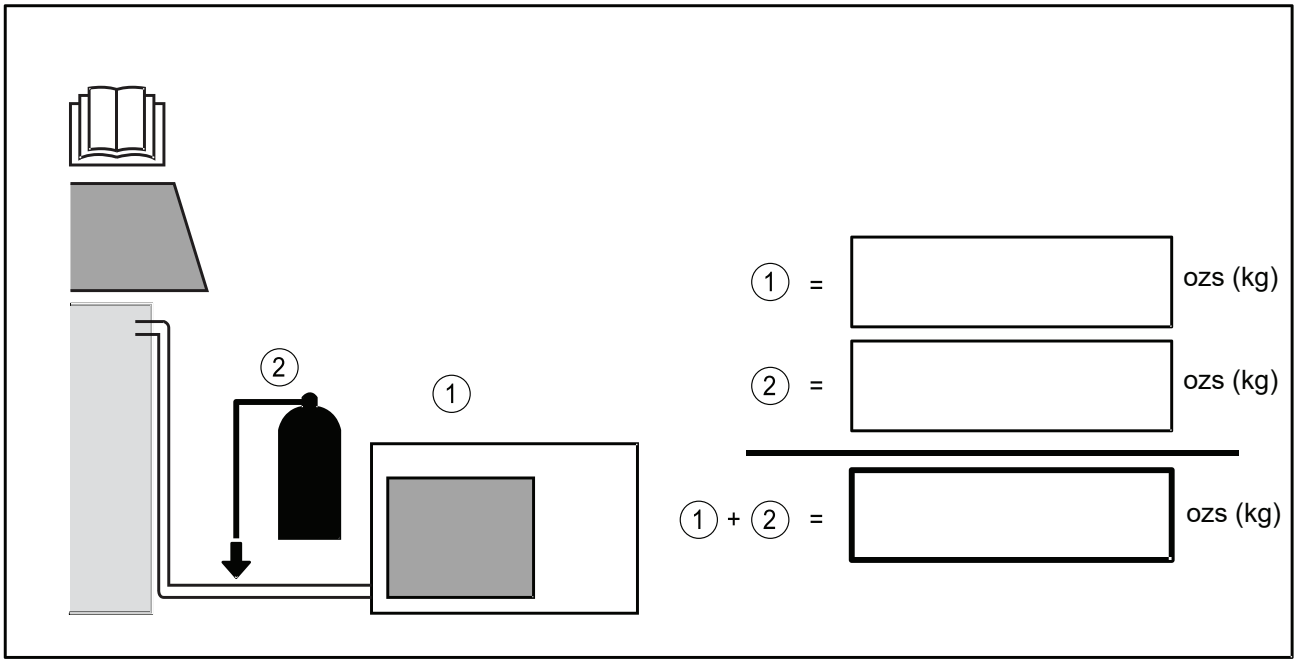

We recommend keeping this information handy for future service and maintenance needs.

System Notes

The design and specifications of this product are subject to change without prior notice as development continues. Consult with the sales agency or manufacturer for details. Refer to the equipment nameplate for all other applicable specifications.

PIONEER®

is a registered trademark of Parker Davis HVAC International, LLC.

Parker Davis HVAC International
7290 NW 77 Court, Miami, FL 33166 - USA
Tel : (305) 513-4488
Fax : (305) 513-4499
E-mail : info@pdhvac.com
Website: www.pdhvac.com

Pioneer product line, parts, and supplies are available online for convenient ordering at:
www.highseer.com
www.pioneerminisplit.com

Scan the below code to visit our support page where you can find more installation materials:

SCAN ME

Copyright 2025, Parker Davis HVAC International, LLC., All rights reserved.