Job Name:	
Submitted By:	

Submittal Sheet For: RT012GLSILCFHG / YN012GLSI24RPG

Date _____

Ref. _____

Ceiling-Concealed Ducted 19SEER Inverter Heat Pump

System Full Set Model: **RYT012GLSI24RL**

AHRI Reference Number: **217048763**

Cooling Mode Performance

Rated Cooling	11,000 BTU/hr
Ambient Range	5~131°F
SEER2 Rating	19.0 BTU/W·h
EER2 Rating	11.0 BTU/W·h

* 100% Capacity @ Indoor DB 80°F / WB 67°F

Heating Mode Performance

Rated Heating	12,000 BTU/hr
Ambient Range	-13~86°F
HSPF2 IV (V)	8.4 (7.3) BTU/W·h
COP2 (47°F)	3.34 W/W

Heating (17°F) = 10,200 BTU / Heating (5°F) = 8,800 BTU / COP2 (5°F) = 1.8 W/W

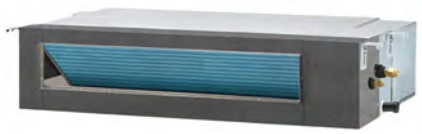

Ceiling-Concealed Ducted Indoor Unit



Outdoor Condensing Unit



User-Selected Installation Kit



Handheld Remote Controller

Electrical Information

	Cooling	Heating
Rated Input (W)	940	1,030
Rated Current (A)	4.1	4.5
Breaker Needed	15A (Double-Pole)	
Power Supply	**208~230V, 60Hz, 1Ph**	

Piping and Refrigerant

Liquid Line (OD)	1/4 in
Suction Line (OD)	3/8 in
Refrigerant Precharge	R-454b (10 - 25 ft.)
Max Length/Height Diff.	50 ft. / 33 ft.

This combination is Energy-Star certified.

ENERGY STAR

Interior Unit (Air Handler) Specifications

Type	Heat Pump
Sound Level (dBA)	43 (Hi) / 41 (Med) / 39 (Lo)
Auto Air Circulation	2-Way Louver (Up-Down + Left-Right)
Dimensions (WDH)	27-1/2 in x 19-1/4 in x 7-7/8 in
Weight (lbs)	33.1

Exterior Unit (Condenser) Specifications

Sound Level (dBA)	52
Recommended Room Size	350~500 Sq. ft.
Minimum Room Size	40 Sq. ft.
Compressor	Inverter-Driven Rotary
Dimensions (WDH)	31-7/8 in x 12 in x 21-5/8 in
Weight (lbs)	58.4

RT012GLSILCFHG Air Handler Dimensional Data

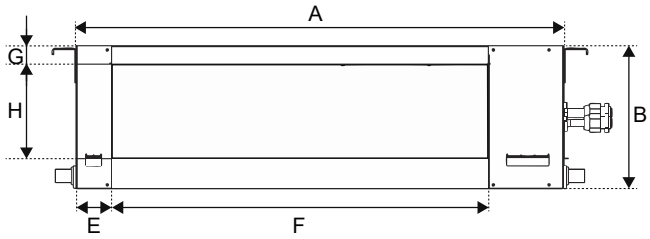

Supply Side

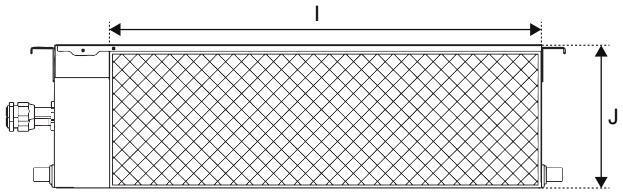

Inlet Side

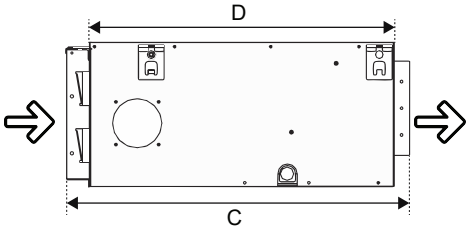

Side View

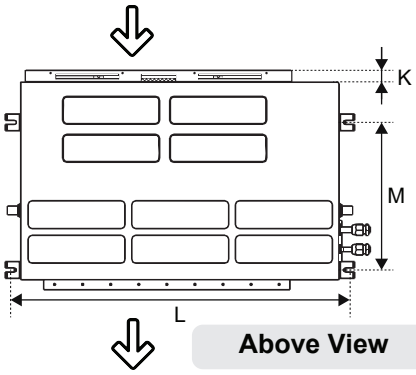

Above View

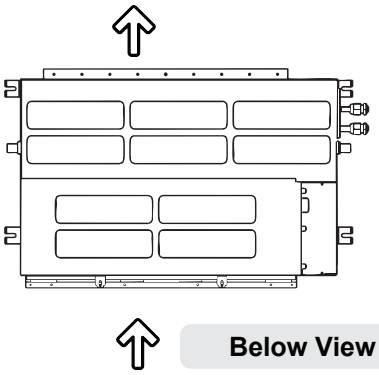

Below View

Overall Air Handler Dimensions				Front Side Air Outlet (Supply)				Rear Side Air Inlet (Return)			Mounting Brackets	
A	B	C	D	E	F	G	H	I	J	K	L	M
27-5/8 in	7-7/8 in	19-3/8 in	17-3/4 in	1-3/4 in	20-1/8 in	1/8 in	5-1/2 in	23-5/8 in	7-3/8 in	1-3/8 in	29-1/8 in	11-3/4 in
701.7 mm	200 mm	492.1 mm	450.9 mm	44.5 mm	511.2 mm	3.2 mm	139.7 mm	600.1 mm	187.3 mm	34.9 mm	739.8 mm	298.5 mm

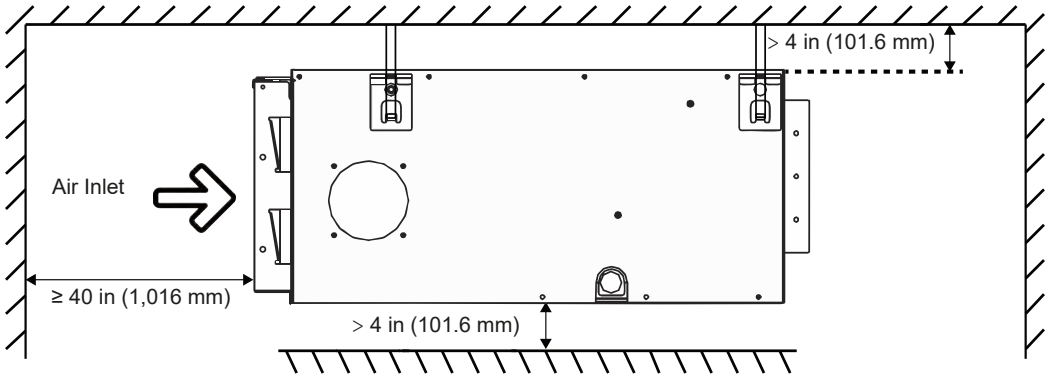

Side View

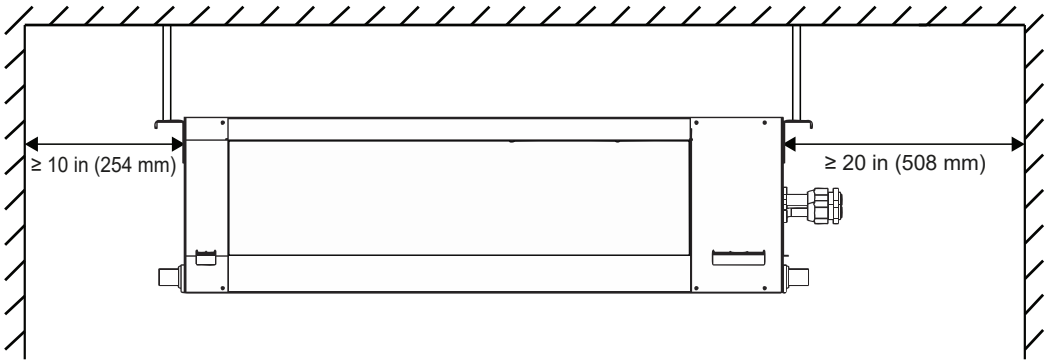

Front View

YN012GLSI24RPG Condenser Unit Dimensional Data

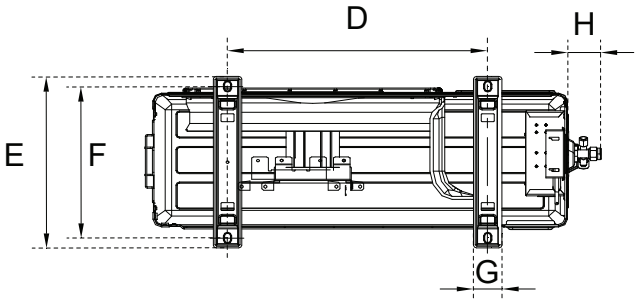

Underside View

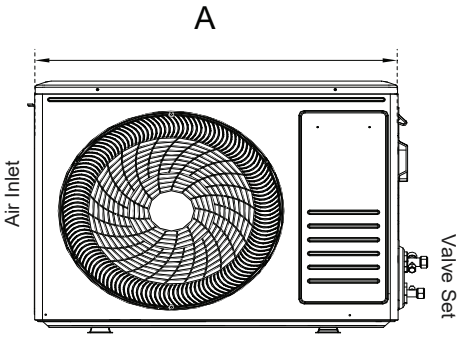

Front View

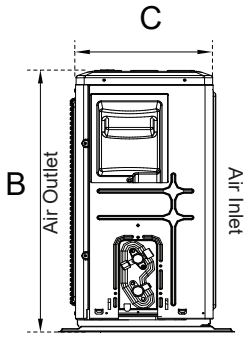

Side View

Model	A	B	C	D	E	F	G	H
YN012GLSI24RPG	29-1/8 in	21-3/4 in	10 in	17-1/8 in	12 in	11-1/4 in	1-7/8 in	2-1/4 in
	741 mm	551 mm	253 mm	434 mm	305 mm	285 mm	48 mm	58 mm



Warranty Information and Length

Complete warranty details are available with the vendor or online at https://www.pdhvac.com/support/warranty/. This high quality system is eligible for up to 10 years limited warranty on the compressor, and 7 years on other internal parts. To qualify for this warranty, the system must be installed within 90 days by a registered technician. All other installations that are registered default to 5 years parts/ compressor. Products unregistered qualify for only 1 year parts/ compressor warranty.

Outstanding Features

- LED Display
- Energy Saving
- Ultra-Thin Design
- Dual Drain Options
- Customizable Timer
- Eco-Friendly Refrigerant
- Whisper-Quiet Operation
- Power Loss Memory Recovery

airlink

WiFi

Available Accessories

Part Number	Description
IKT-LCVR4P-KIT	*Decorative PVC Line Cover Kit*
IKT-LNBR-1/4-3/8	*BendAid Flexible Easy Bender Kit*
BRK-FRM-C-2P	*Folding Mounting Bracket w/ Leveler*
IKT-UVL32UL-AG	*UVC Bacterial Disinfection Kit*
IKT-SURPRK-DV2	*Ultimate Surge and Power Protection*