

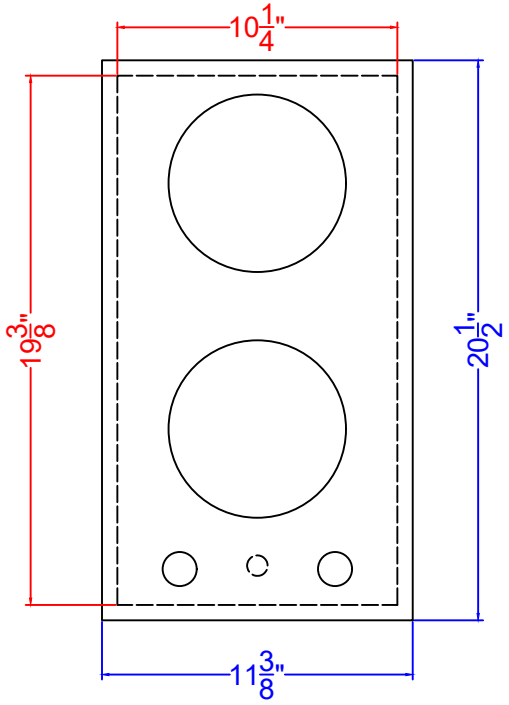

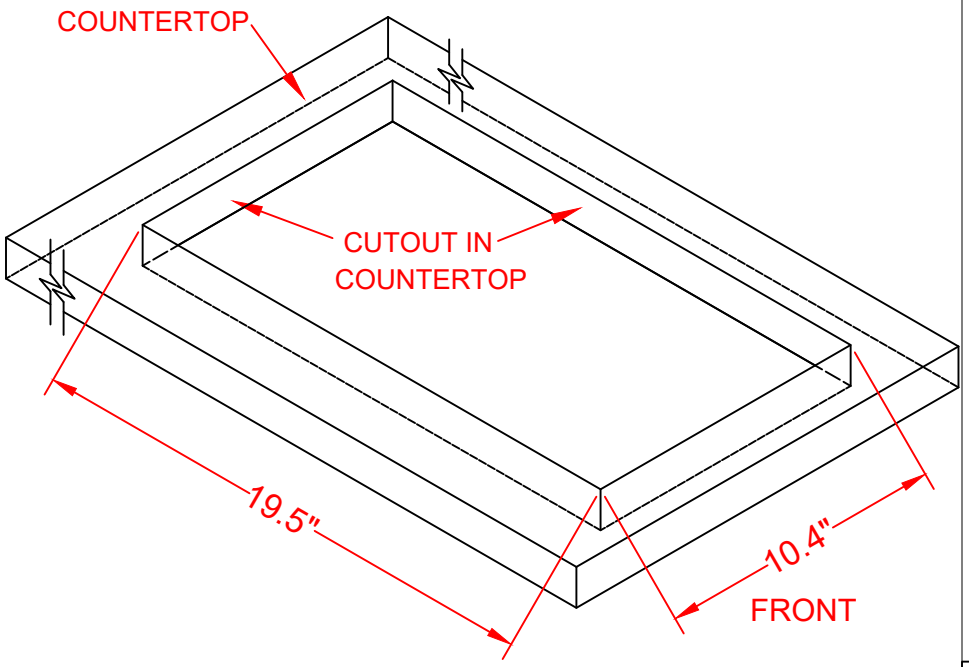

CR2110B2

CR2120W2

Cooktop

10/05/26

SUMMIT APPLIANCE

SUMMIT APPLIANCE DIVISION,
FELIX STORCH, INC. ISO 9001 CERTIFIED
TEL 718.893.3900 • **FAX** 844.478.8799
summitappliance.com
info@summitappliance.com