DUCTLESS MINI SPLIT SYSTEM AIR CONDITIONER / HEAT PUMP

PIONEER®

# YNL-24 Multi-Zone Series

## For 2/3/4/5/6-Circuit Systems

*Quantum Ultra - CT/RT/UT/WT Indoor and YN Outdoor*

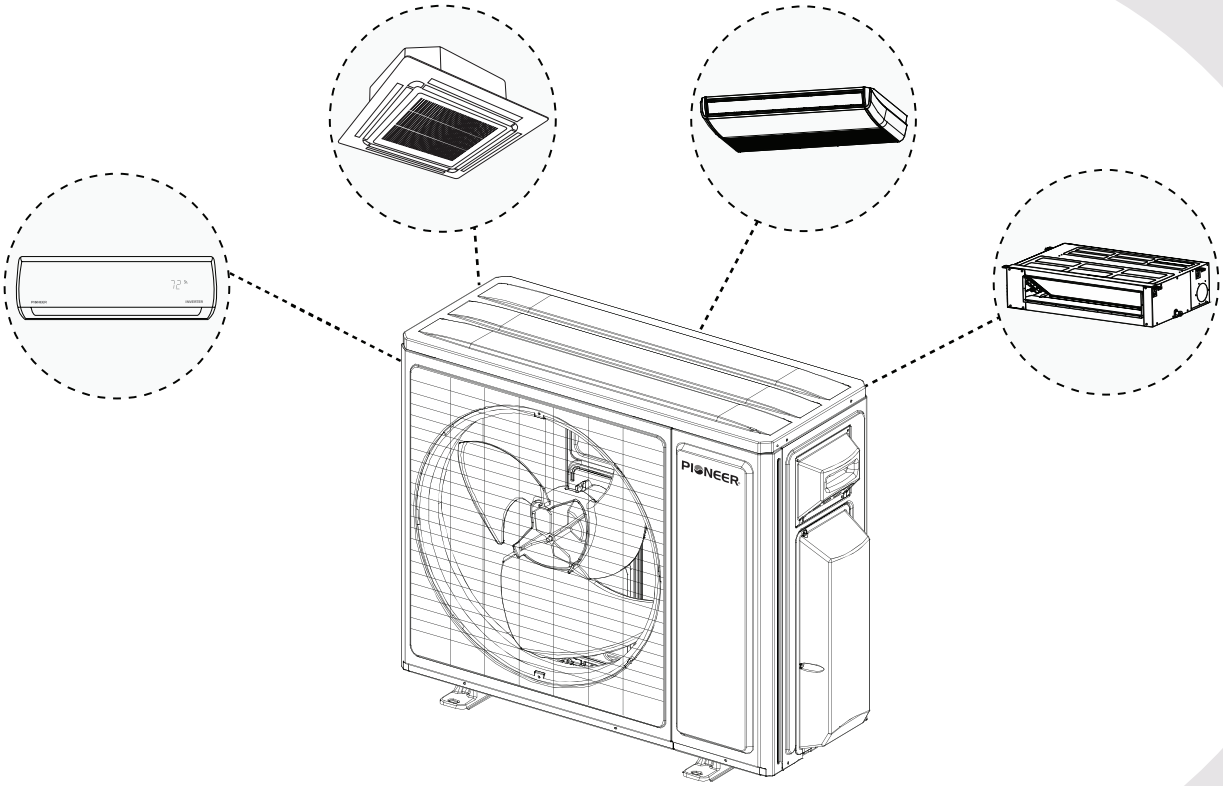


# Addendum to Standard Manual (For Multi-Zone)

**For use with designated Pioneer® Free-Match Air Handlers, as an add-on to the primary manual.**

**IMPORTANT NOTICE:**
Read this manual carefully before installing or operating your new air conditioning system. Be sure to save this manual for future reference.

# CONTENTS

1. Disclaimer ..... 3
2. Safety Information ..... 4
3. A2L Refrigerants ..... 20
4. Product Overview ..... 22
5. Compatibility Information ..... 24
6. Outdoor Unit Installation ..... 26
7. Control Board Wiring Diagrams ..... 42
8. PCB Printed Diagrams ..... 48
A. Appendix ..... 54

# Disclaimer

1

This addendum is intended to supplement the standard Installation and User Manual included with each indoor unit when it is used as part of a Multi-Zone Split System. While the overall installation process closely resembles the single-zone system, multi-zone setups involve additional or repeated steps. Refer to the information in this document for the specific process used when completing a multi-zone installation. Read both manuals in full.

To ensure proper performance, safety, and warranty coverage, this outdoor section must be used only with designated Pioneer® brand indoor units that are explicitly approved for use within this product line. While only specific model combinations are currently supported, additional compatible indoor unit types may be introduced in future product releases.

Always consult the latest official Pioneer® multi-zone system compatibility chart or relevant technical documentation before configuring or installing a multi-split system.

# Safety Information

2



No flammable sources



Ventilation necessary



Wear protective gear



Do not use electronics near system



**Refrigerant Leakage Detector**

A handheld leak detector can aid with tracing and isolating refrigerant leaks. It is recommended to have one handy whenever working on the system.

## General Warnings

### *Responsibility & Compliance*

- The user is responsible for having the appliance installed by a qualified technician.
- This manual is intended to be used only by professional personnel.
- Follow the instructions given in this manual for handling, installing, cleaning, and maintaining the unit.
- Follow the instructions given in this manual for disposing of the refrigerant.
- Follow the instructions given in this manual for the required installation space dimensions, including the minimum clearance distances from adjacent structures.
- Comply with local and national gas and wiring regulations.
- Comply with local and national electrical codes.
- Repairs must be carried out by an authorized Service Center of the manufacturer. Incorrect repairs could expose the user to risks such as electric shock.

### *Proper Use*

- This appliance is designed for domestic air conditioning use. Do not use it for any other purpose, such as drying clothes or cooling food.
- To prevent dust and waste accumulation, always use the appliance with the air filter mounted. Operating the appliance without the filter may lead to malfunctions.

# Safety Information 2

## General Warnings (Continued)

### *Health & Personal Safety*

- Prolonged and direct exposure to the air conditioner's cold air could be harmful. Take particular care in rooms occupied by children, elderly individuals, or sick people, and avoid directing the airflow onto plants or animals.
- If the appliance gives off smoke or there is a burning smell, immediately cut off the power supply and contact the Service Center. Prolonged use of the device in such conditions could cause fire or electrocution.
- This appliance can be used by children aged 8 years and older, and by individuals with reduced physical, sensory, or mental capabilities, or lack of experience and knowledge, provided they are supervised or have been given instruction on safe use and understand the associated hazards. Children must not play with the appliance. Cleaning and maintenance must not be performed by children without supervision.
- Avoid touching the appliance while barefoot or when any part of your body is wet or damp.
- Do not put the air conditioner in contact with water. The electrical insulation could be damaged, causing electrocution.
- Do not climb onto or place any heavy or hot objects on top of the appliance.
- Do not insert a stick or similar object into the appliance. This may cause injury.
- Do not leave windows or doors open for long periods when the air conditioner is operating.

## Qualification Requirements

### *Installation & Certification*

- The air conditioner must be installed by professional personnel.
- Individuals working on a refrigerant circuit must have a valid and up-to-date certificate from an assessment authority accredited by the industry, recognizing their competence in handling refrigerants. The individual's work on the refrigerant circuit must be in accordance with the assessment specifications.

### *Service & Supervision*

- Service operations must be carried out in accordance with the recommendations of the equipment manufacturer.
- Maintenance and repair operations that require the assistance of other qualified individuals must be conducted under the supervision of a person competent in using flammable refrigerants.
- Only competent individuals shall carry out procedures that affect safety.

# Safety Information

# 2

## General Work Area

### *Site Conditions*

- Ensure the area is safe by controlling flammable materials.
- Ensure the location is not near heat sources or a combustible/explosive environment.
- Install, operate, and store the appliance in a room following the minimum room area requirements.
- Do not install the appliance in an environment where the air could contain gas, oil, or sulfur.
- Avoid working in confined spaces.

### *Work Area Preparation*

- All maintenance staff and individuals working in the local area must be informed about the nature of the work being performed.
- Section off the area around the workspace.

## Work Procedures

### *General Precautions*

- To minimize the risk of exposure to flammable gas or vapor, conduct work using controlled procedures.
- Appropriate anti-static measures, such as wearing anti-static clothing and gloves, are necessary when installing the appliance.
- Be sure to wear a safety helmet, gloves, and a safety belt when working in a high place (more than 6.5 feet / 2 m). Insufficient safety measures may cause a fall.

### *Tools & Parts*

- The use of inappropriate parts or tools may cause an electrical shock, excessive heat generation, or fire.

### *Handling the Appliance*

- Do not pierce or burn the appliance.
- When filling the combustible refrigerant, improper operations may cause injury to individuals or damage to property.

# Safety Information

# 2

## Work Procedures (Continued)

### *Verification*

- Complete a leak test after the installation is finished.

## Electrical Safety

### *Pre-Work Safety Checks*

Repairing and maintaining electrical components must include initial safety checks and component inspections. Initial safety checks must include the following:

- Confirm the capacitors are completely discharged before conducting repair work, doing so in a safe manner to avoid sparking. The step-up capacitor supplies high-voltage electricity to the electrical components of the outdoor unit, and a charged capacitor may cause an electrical shock.
- Ensure that no live electrical components and wiring are exposed while charging, recovering, or purging the system.
- If it is necessary to supply power to the equipment to conduct the repair or inspect the circuits, do not touch any electrically charged sections of the equipment.
- Do not repair electrical components with wet hands. Doing so may cause an electrical shock.
- Confirm there is continuity of ground bonding.

### *Qualified Work & Compliance*

- All electric work must be performed by a licensed technician in accordance with local regulations and the instructions provided in this manual.

### *Disconnecting Power*

- Disconnect the appliance from the main electricity supply before carrying out any cleaning or maintenance. Before accessing the terminals specifically, ensure all power circuits are disconnected from the power supply.
- Ensure that the appliance is disconnected from the power supply when it will remain inoperative for a long period. The appliance should also be disconnected when carrying out cleaning or maintenance.
- The appliance must be fitted with a means for disconnection from the main power supply, featuring contact separation in all poles to provide full disconnection under "Over Voltage Category III" conditions. These means must be incorporated in the fixed wiring in accordance with the wiring rules.

# Safety Information

# 2

## Electrical Safety (Continued)

### *Electrical Components & Specifications*

- When changing electrical components, they must be fit-for-purpose and meet the correct specifications.
- Ensure that the main voltage corresponds to the value stamped on the rating plate.
- Replace the fuse with a new one of the same specification if it is blown. Do not replace it with copper or other conducting wire.

### *Wiring & Terminals*

- Make sure each wiring terminal is connected firmly during installation and maintenance.
- Be sure to use the specified wiring between the indoor and outdoor units. Make the connections securely and route the cable properly so that there is no force pulling the cable at the connection terminals. Improper connections may cause excessive heat generation or fire.
- When wiring between the indoor and outdoor units, make sure that the terminal cover does not lift off or dismount because of the cable. If the cover is not mounted properly, the terminal connection section may cause an electrical shock, excessive heat generation, or fire.
- If the power cable and lead wires are scratched or have deteriorated, be sure to replace them. Damaged cables or wires may cause an electrical shock, excessive heat generation, or fire.
- Apply protective accessories such as protective boards, cable-cross loops, and wire clips.

### *Power Cord & Plug*

- Confirm the power socket is suitable for the plug. Keep the switch or power plug clean.
- Correctly insert the power plug into the socket to avoid electric shock or fire caused by insufficient contact.
- If the power cord or connection wire is not long enough, obtain a properly sized power cord or connection wire from the manufacturer or distributor. Do not extend the wire yourself.
- Do not pull out the plug to switch off the appliance when it's in operation, because this could create a spark, causing a fire.
- Do not bend, tug, or compress the power cord because this could cause damage. A damaged power cord can cause electrical shocks or fire. Only specialized technical personnel can replace a damaged power cord.

# Safety Information 2

## Electrical Safety (Continued)

### *Circuit Requirements*

- The air conditioner must use a dedicated circuit. Do not share the same circuit with other appliances.
- Do not use a joined power cable or extension cable, or share the same power outlet with other electrical appliances, since it may cause an electrical shock, excessive heat generation, or fire.
- For air conditioners without plugs, a disconnect switch must be installed in the circuit. The switch must provide all-pole disconnection, and the contact separation distance must be more than 0.1 inch (3 mm).
- Depending on the conditions of the installation site, installation of a leakage breaker may be necessary to prevent electrical shocks.
- If the unit is being installed in a humid place, a circuit breaker must be installed.

### *Grounding*

- Have the unit adequately grounded. The grounding wire must not be used for any other purpose.
- Be sure to provide grounding when repairing the equipment in a humid or wet place to avoid electrical shocks.
- The live, neutral, and grounding wires of the power supply must correspond to the live, neutral, and grounding wires of the air conditioner.

### *Fault Handling*

- If a fault exists that could compromise safety, the electrical supply must not be connected to the circuit until the fault is resolved. If the fault cannot be immediately corrected but it is necessary to continue operation, a temporary solution must be implemented. If a temporary solution is implemented, it must be reported to the owner of the equipment, ensuring both parties are informed.

## Cabling

- Ensure the cabling is protected from wear, corrosion, excessive pressure, vibrations, sharp edges, or any other adverse environmental effects.
- When checking the cable, take into account the effects of aging or continual vibrations from sources such as compressors or fans.

# Safety Information

# 2

## Well-Ventilated Area

- Ensure the area is open and well-ventilated before accessing the system or performing any work that generates heat.
- Ventilation must be maintained throughout the work.
- Confirm that all ventilation openings remain unobstructed.
- Conduct welding work in a well-ventilated location. Using a welder in an enclosed room may cause oxygen deficiency.

## No Ignition Sources

### *Prohibited Sources & Activities*

- Individuals carrying out work involving exposed pipework on a refrigerant system are prohibited from using any sources of ignition that may lead to a risk of fire or explosion.
- All possible ignition sources, including smoking, must be kept at a sufficient distance from the installation or maintenance site.
- When using refrigerant R454B during installation or maintenance, the location must be free of open flames, welding activity, drying ovens, or any other heat source exceeding 548°F (286.7°C).
- Do not use ignition sources when conducting any work that exposes refrigeration system piping.

### *Site Verification & Signage*

- Before conducting work on the equipment, the surrounding area must be surveyed to ensure there are no flammable hazards or ignition risks.
- No Smoking signs must be displayed.

# Safety Information

# 2

## Refrigerant & Refrigerant Piping

### *Leak Detection*

- Check the area with an appropriate refrigerant detector before and during work to identify potentially flammable atmospheres, including when moving the air conditioner or inspecting a secondary circuit in indirect refrigerant systems.
- Ensure leak detection equipment is suitable for flammable refrigerants (non-sparking, adequately sealed, or intrinsically safe).
- Never use potential ignition sources for refrigerant leak detection.
- Remember that refrigerants may be odorless, so visual/instrument checks are essential.

### *Ventilation & Environmental Safety*

- Ensure ventilation safely disperses any released refrigerant into the outside atmosphere.
- Never vent refrigerant into the atmosphere — this is illegal under federal and local regulations. Always read and follow applicable local EPA laws.

### *Installation Requirements*

- Ensure the refrigerant charge size complies with minimum room size requirements.
- Keep the refrigerant piping as short as possible.
- Protect the refrigerant piping from physical damage.
- Install piping and components away from corrosive substances; if unavoidable, use corrosion-resistant materials or adequate corrosion protection.
- Ensure the installation complies with all applicable national refrigerant regulations.
- Follow this manual's instructions for handling, installation, cleaning, maintenance, and disposal of refrigerant.

### *Leak Response / Emergency Procedures*

- If refrigerant gas is discharged during repair work, do not touch it — it may cause frostbite.
- If the indoor unit leaks refrigerant during installation, immediately shut off the outdoor unit valve.
- Evacuate all personnel from the area for at least 15 minutes until the refrigerant fully dissipates.

# Safety Information 2

## Refrigerant & Refrigerant Piping (Continued)

### *Repair & Disposal*

- If the product is damaged, transport it to a maintenance station.
- On-site welding or refrigerant pipe repairs are strictly prohibited.

## Leak Detection Methods

### *Acceptable Detection Methods*

Electronic leak detectors and leak detection fluids are acceptable methods of leak detection.

**Electronic Leak Detector:** Use to detect flammable refrigerants.

- Ensure the leak detector's sensitivity is properly calibrated.
- Calibrate the detection equipment in a refrigerant-free area.
- Confirm the gas percentage does not exceed 25%.
- Confirm the detection equipment is not a potential ignition source and is suitable for the refrigerant being used.
- Set the leak detection equipment to a percentage of the refrigerant's Lower Flammability Limit (LFL).
- Calibrate the detection equipment to the refrigerant being used.

**Leak Detection Fluids:** Suitable for use with most refrigerants.

- Avoid using detergents containing chlorine, as the chlorine may react with the refrigerant and corrode the copper pipework.

### *If a Leak Is Found*

- If the refrigerant gas leaks, be sure to locate the leaking point and repair it before charging the refrigerant. After charging the refrigerant, make sure that there is no leak.
- If a leak is suspected, extinguish all naked flames.
- If refrigerant gas leaks during repair work, ventilate the area. Refrigerant gas may generate toxic gases when it comes into contact with flames.
- If the leaking point cannot be located and the repair work must be stopped, be sure to pump down and close the service valve to prevent refrigerant gas from leaking into the room.

# Safety Information

# 2

## Leak Detection Methods (Continued)

### *If a Leak Is Found (Continued)*

- If a refrigerant leak is found that requires brazing, recover all the refrigerant from the system or isolate it in a part of the system remote from the leak.
- Purge oxygen-free nitrogen (OFN) through the system before and during the brazing process.

## Removal & Evacuation

### *Removal & Evacuation Procedure*

1. Recover the refrigerant charge into the proper recovery cylinders.
2. Purge the circuit with inert gas.
3. Evacuate the refrigerant.
4. Purge the circuit again with inert gas.
5. Open the circuit by cutting or brazing.
6. Repeat this process until no refrigerant remains in the system.

### *Flushing Procedure*

1. Break the vacuum in the system with OFN.
2. Continue filling until the working pressure is reached.
3. Vent the system to the atmosphere.
4. Pull the system down to a vacuum.

### *Precautions*

- Do not use compressed air or oxygen for this task.
- Ensure that the outlet for the vacuum pump is well-ventilated and not close to any ignition sources.
- When disconnecting the suction or discharge pipe of the compressor at the welded section, evacuate the refrigerant gas completely at a well-ventilated location first. If there is gas remaining inside the compressor, the refrigerant gas or refrigerating machine oil may discharge when the pipe is disconnected, and it may cause injury.

# Safety Information

2

## Decommissioning

### *Before Beginning*

Ensure the following:

- The technician is completely familiar with the equipment and its details.
- The recovery process is supervised throughout the procedure by a competent person.
- An oil and refrigerant sample is taken in case analysis is required for reusing reclaimed refrigerant.
- The system electrically isolated.
- Electrical power is available when completing this procedure.
- Recovery equipment and cylinders conform to the appropriate standards.
- Mechanical handling equipment is available for moving refrigerant cylinders.
- All personal protective equipment (PPE) is available.

### *Recovery Process*

- Pump down the refrigerant system, if possible.
- If vacuuming the system is not possible, make a manifold so that the refrigerant can be removed from various parts of the system.
- Ensure the cylinder is situated on the scales before the recovery procedure begins.
- Start the recovery machine and operate it in accordance with the manufacturer's instructions.
- Do not overfill the cylinders (maximum 80% liquid charge by volume).
- Do not exceed the maximum working pressure of the cylinder, even temporarily.

### *Recovery Process*

- After the cylinders are filled correctly and the process is completed, promptly remove the cylinders and equipment from the site.
- Confirm the isolation valves on the equipment are closed off.
- Do not charge the recovered refrigerant into another refrigeration system unless the refrigerant has been cleaned and checked.

# Safety Information

# 2

## Refrigerant Recovery

### *General Principle*

- When servicing or decommissioning the system, remove the refrigerant safely.

### *Cylinder & Equipment Requirements*

- When transferring refrigerant, use appropriate recovery cylinders. The cylinders must include pressure-relief and shut-off valves.
- Ensure that the correct number of cylinders for holding the total system charge is available.
- Empty recovery cylinders must be evacuated and cooled before recovering the refrigerant.
- A set of calibrated weighing scales must be available.
- Hoses must be complete with leak-free disconnect couplings.
- Confirm the recovery equipment is functioning properly and has been maintained correctly. A set of instructions for its use must be readily available.
- The recovery equipment must be capable of recovering flammable refrigerants.
- Confirm that any associated electrical components are sealed to prevent ignition in the event of a refrigerant release.

### *During Recovery*

- Do not mix refrigerants in the recovery unit or cylinders.

### *After Recovery*

- Return the recovered refrigerant to the refrigerant supplier in the correct recovery cylinder, along with the relevant waste transfer note.

### *Compressor & Oil Handling*

- Before removing the compressors or compressor oils, evacuate them to an acceptable level, ensuring the flammable refrigerant does not remain within the lubricant.
- Complete the evacuation process before returning the compressors to the suppliers.
- Use only electric heating to the compressor body to accelerate the evacuation process.
- Safely drain the oil from the system.

# Safety Information

# 2

## Labeling

- Label the equipment stating that it has been decommissioned and emptied of refrigerant.
- Ensure the label is dated and signed by the responsible technician.
- Confirm the labels on the equipment state that the equipment contains flammable refrigerant.
- Confirm that all equipment markings remain visible and legible. Replace or correct any illegible markings or signs.

## Fire Extinguisher

- If you need to conduct hot work on the refrigeration equipment or any associated parts, appropriate fire extinguishing equipment must be available.
- Keep a dry powder or $CO_2$ fire extinguisher adjacent to the charging area.

## Defrosting

- Do not use any means to accelerate the defrosting process or clean the frost. Follow the manufacturer's guidelines.

## Storage

- Store the appliance in a well-ventilated area where the room size meets the minimum area specified for operation.
- Store the appliance in a room free of continuously operating open flames (e.g., a gas appliance) and ignition sources (e.g., an electric heater).
- Store the appliance properly to prevent mechanical damage.

## Relocation

- When relocating the equipment, make sure that the new installation site has sufficient strength to withstand the equipment's weight. If the site does not have sufficient strength or the installation work is not conducted securely, the equipment may fall and cause injury.
- Do not tilt the unit when relocating it. The water inside the unit may spill and wet the furniture and floor.

# Safety Information

# 2

## Disposal

- The packaging materials are recyclable and should be disposed of in separate waste bins.
- When the air conditioner reaches the end of its useful life, bring it to a special waste collection center for disposal.
- The batteries in the remote controller must be recycled or disposed of properly. Regarding the disposal of used batteries, discard them as sorted municipal waste at an accessible collection point. If a child swallows the coin battery, see a doctor immediately.

## Repairs to Sealed Components

### *Before Starting Work*

- During repairs to sealed components, disconnect all electrical supplies from the equipment being worked on prior to removing sealed covers.
- If it is necessary to maintain an electrical supply to the equipment during service, use a permanently operating form of leak detection, located at the most critical point.
- Intrinsically safe components do not have to be isolated prior to working on them.

### *Casing & Seal Integrity*

- When working on electrical components, ensure the casing is not altered in a way that will affect the level of protection. This includes damage to cables, an excessive number of connections, terminals not meeting the original specifications, damage to seals, and incorrect fitting of glands.
- Ensure that the seals or sealing materials have not degraded to the point where they no longer prevent the ingress of flammable atmospheres.
- Using silicone sealant may inhibit the effectiveness of certain types of leak detection equipment.

### *Replacement Parts*

- Replacement parts must be in accordance with the manufacturer's specifications.

# Safety Information

# 2

## Repairs to Intrinsically Safe Components

- Intrinsically safe components are the only types of components that can be worked on while in the presence of a flammable atmosphere.
- Do not apply permanent inductive or capacitive loads to the circuit unless they are within the equipment's permissible voltage and current limits.
- The test apparatus must have the correct rating.
- Replace components only with parts specified by the manufacturer.
- Other parts may cause leaked refrigerant to ignite in the atmosphere.

## Maintenance & Service

- Do not clean the air conditioner with water. Doing so may cause an electrical shock.
- Be sure to measure insulation resistance after the repair, and make sure that the resistance is 1 MΩ or higher. Faulty insulation may cause an electrical shock.
- Be sure to check the drainage of the indoor unit after the repair. Faulty drainage may cause water to enter the room and wet the furniture and floor.
- If maintenance and repairs require assistance from additional personnel, the tasks must be conducted under the supervision of a certified professional competent in handling flammable refrigerants.
- Ensure all mechanical connections remain accessible for maintenance.
- Ensure the servicing is performed only in accordance with the manufacturer's recommendations.
- If the installation platform or frame has corroded, replace it. A corroded installation platform or frame may cause the unit to fall, resulting in injury.

# Safety Information

2

## Usage Statement

- Protect the pipework from physical damage. For flammable refrigerants, do not install pipes in an unventilated space if it is smaller than the minimum requirements in Annex GG. For A2L refrigerants, you must install pipes that comply with 22.116. If field charging is necessary, technicians must quantify the impact of different pipe lengths on the refrigerant charge.
- Ensure that mechanical connections made in accordance with 22.118 remain accessible for maintenance.
- Protect all pipework — including piping materials, routing, and installation — from physical damage during operation and servicing. It must comply with all national and local codes and standards, including:
    - ASHRAE 15
    - ASHRAE 15.2
    - IAPMO Uniform Mechanical Code
    - ICC International Mechanical Code
    - CSA B52
    - All field joints must be accessible for inspection before being covered or enclosed.
- Qualified personnel must carry out maintenance, service, and repair operations according to Annex HH.

# A2L Refrigerants

3

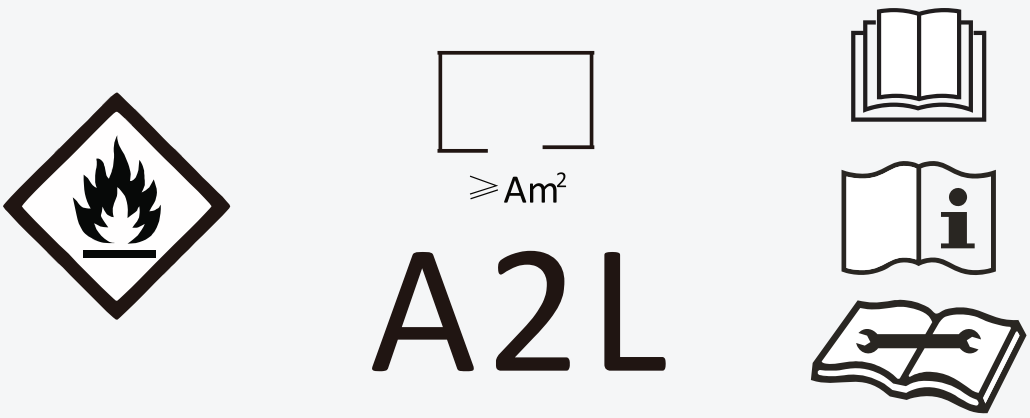


In UL/CSA 60335-2-40, R454B refrigerant is classified as A2L, indicating that it is mildly flammable. As a result, R454B is suitable for systems requiring additional refrigerant charge, provided the area of the rooms served by the system is limited accordingly. The total amount of refrigerant in the system must be less than or equal to the allowable maximum refrigerant charge, which depends on the area of the rooms served by the system.

**Definitions**

- $M_C$: The actual refrigerant charge in the system.
- A: The actual room area where the appliance is installed.
- $A_{min}$: The required minimum room area.
- $M_{max}$: The allowable maximum refrigerant charge in a room.
- $Q_{min}$: The minimum circulation airflow.
- $Anv_{min}$: The minimum opening area for connecting rooms.

**Maximum Charge & Required Minimum Floor Area**

m = ($6m^3$) x LFL, m = ($52\ m^3$) x LFL, m = ($260^3$) x LFL

Where LFL is the lower flammable limit in $kg/m^3$, R-454B LFL is 0.303 kg $/m^3$

For appliances with a charge amount m1 < M = m2

The maximum charge in a room must be in accordance with the following: $M_{max} = 2.5 \times (LFL)^{(5/4)} \times h_0 \times (A)^{1/2}$, do not exceed $M_{max} = SF \times LFL \times h_0 \times A$.

The required minimum floor area ($A_{min}$) to install an appliance with refrigerant charge M(kg) must be in accordance with the following: $A_{min} = (M / (2.5 \times (LFL)^{(5/4)} \times h_0))^2$, not less than $A_{min} = M / (SF \times LFL \times h_0)$

# A2L Refrigerants

3

### Table 1 - Maximum Charge

| $h_0$(m) | Floor Area | Charge Limit |
|---|---|---|
| (Installed Height) | 43 ft² (4 m²) | 38.5 oz (1.09 kg) |
| | 75 ft² (7 m²) | 67.3 oz (1.91 kg) |
| 1.8 (6'0") | 107 ft² (10 m²) | 96.2 oz (2.73 kg) |
| | 161 ft² (15 m²) | 138.2 oz (3.92 kg) |
| | 215 ft² (20 m²) | 159.6 oz (4.52 kg) |
| | 322 ft² (30 m²) | 195.5 oz (5.54 kg) |
| | 538 ft² (50 m²) | 252.3 oz (7.15 kg) |
| 2.5 (8'2") | 43 ft² (4 m²) | 53.44 oz (1.52 kg) |
| | 75 ft² (7 m²) | 93.5 oz (2.65 kg) |
| | 107 ft² (10 m²) | 133.6 oz (3.79 kg) |
| | 161 ft² (15 m²) | 191.9 oz (5.44 kg) |
| | 215 ft² (20 m²) | 221.6 oz (6.28 kg) |
| | 322 ft² (30 m²) | 271.4 oz (7.7 kg) |
| | 538 ft² (50 m²) | 350.4 oz (9.94 kg) |
| 2.8 (9'2") | 43 ft² (4 m²) | 59.8 oz (1.7 kg) |
| | 75 ft² (7 m²) | 104.7 oz (2.97 kg) |
| | 107 ft² (10 m²) | 149.6 oz (4.24 kg) |
| | 161 ft² (15 m²) | 215 oz (6.09 kg) |
| | 215 ft² (20 m²) | 248.2 oz (7.04 kg) |
| | 322 ft² (30 m²) | 304 oz (8.62 kg) |
| | 538 ft² (50 m²) | 392.5 oz (11.12 kg) |

### Table 2 - Minimum Room Area

Refrigerant = R-454B, LFL = 0.303 kg/m$^3$

| $h_0$(m) | Charge Limit | Min. Room Area |
|---|---|---|
| (Installed Height) | 28.2 oz (0.8 kg) | 32.0 ft² (2.93 m²) |
| | 33.5 oz (0.95 kg) | 38.0 ft² (3.48 m²) |
| 1.8 (6'0") | 42.3 oz (1.2 kg) | 48.0 ft² (4.4 m²) |
| | 60.0 oz (1.7 kg) | 68.0 ft² (6.23 m²) |
| | 77.6 oz (2.2 kg) | 88.0 ft² (8.07 m²) |
| | 98.8 oz (2.8 kg) | 111.0 ft² (10.27 m²) |
| | 119.9 oz (3.4 kg) | 135.0 ft² (12.47 m²) |
| 2.5 (8'2") | 28.2 oz (0.8 kg) | 23.0 ft² (2.11 m²) |
| | 33.5 oz (0.95 kg) | 27.0 ft² (2.51 m²) |
| | 42.3 oz (1.2 kg) | 35.0 ft² (3.17 m²) |
| | 60.0 oz (1.7 kg) | 49.0 ft² (4.49 m²) |
| | 77.6 oz (2.2 kg) | 63.0 ft² (5.81 m²) |
| | 98.8 oz (2.8 kg) | 80.0 ft² (7.39 m²) |
| | 119.9 oz (3.4 kg) | 97.0 ft² (8.98 m²) |
| 2.8 (9'2") | 28.2 oz (0.8 kg) | 21.0 ft² (1.89 m²) |
| | 33.5 oz (0.95 kg) | 25.0 ft² (2.24 m²) |
| | 42.3 oz (1.2 kg) | 31.0 ft² (2.83 m²) |
| | 60.0 oz (1.7 kg) | 44.0 ft² (4.01 m²) |
| | 77.6 oz (2.2 kg) | 56.0 ft² (5.19 m²) |
| | 98.8 oz (2.8 kg) | 72.0 ft² (6.6 m²) |
| | 119.9 oz (3.4 kg) | 87.0 ft² (8.02 m²) |

### Table 3 - Minimum Room Area

The calculated minimum allowable room area for all capacities is as follows:

| Model (BTU) | Minimum Allowable Room Area (Assumes 25 ft. lineset and 6 ft. install height) |
|---|---|
| YN020GLSI24M2G | 68 ft² (6.33 m²) |
| YN030GLSI24M3G | 88 ft² (8.07 m²) |
| YN040GLSI24M4G | 111 ft² (10.27 m²) |
| YN050GLSI24M5G | 135 ft² (12.47 m²) |
| YN060GLSI24M6G | 190 ft² (17.68 m²) |

### Table 4 - Maximum Charge

The standard factory refrigerant charge amount as well as the maximum allowable charge are as follows:

| Model (BTU) | R-454B Refrigerant (Standard Charge) | R-454B Refrigerant (Maximum Charge) |
|---|---|---|
| 2-Zone | 3.75 lbs / 1,700 g | 4.29 lbs / 1,950 g |
| 3-Zone | 4.85 lbs / 2,200 g | 5.67 lbs / 2,575 g |
| 4-Zone | 6.17 lbs / 2,800 g | 7.27 lbs / 3,300 g |
| 5-Zone | 7.5 lbs / 3,400 g | 8.65 lbs / 3,925 g |
| 6-Zone | 9.25 lbs / 4,200 g | 10.9 lbs / 4,950 g |

# Product Overview

# 4

## Model Numbers

**Note**

Serial numbers are typically located behind the electronic control box cover cap of each unit.

| Circuit | Model Number |
|---|---|
| 2 | YN020GLSI24M2G |
| 3 | YN030GLSI24M3G |
| 4 | YN040GLSI24M4G |
| 5 | YN050GLSI24M5G |
| 6 | YN060GLSI24M6G |

# Product Overview

4

## Dimensions & Weight

**YN020GLSI24M2G, YN030GLSI24M3G**
**YN040GLSI24M4G, YN050GLSI24M5G**

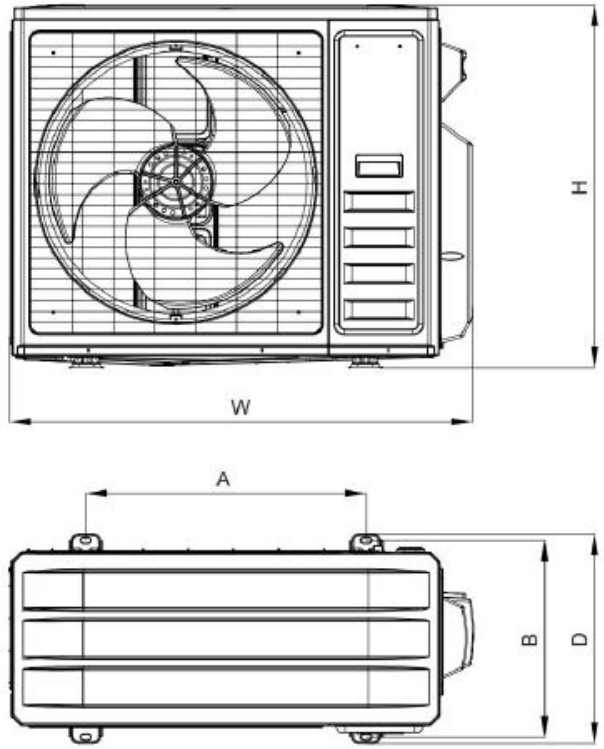


**YN060GLSI24M6G**

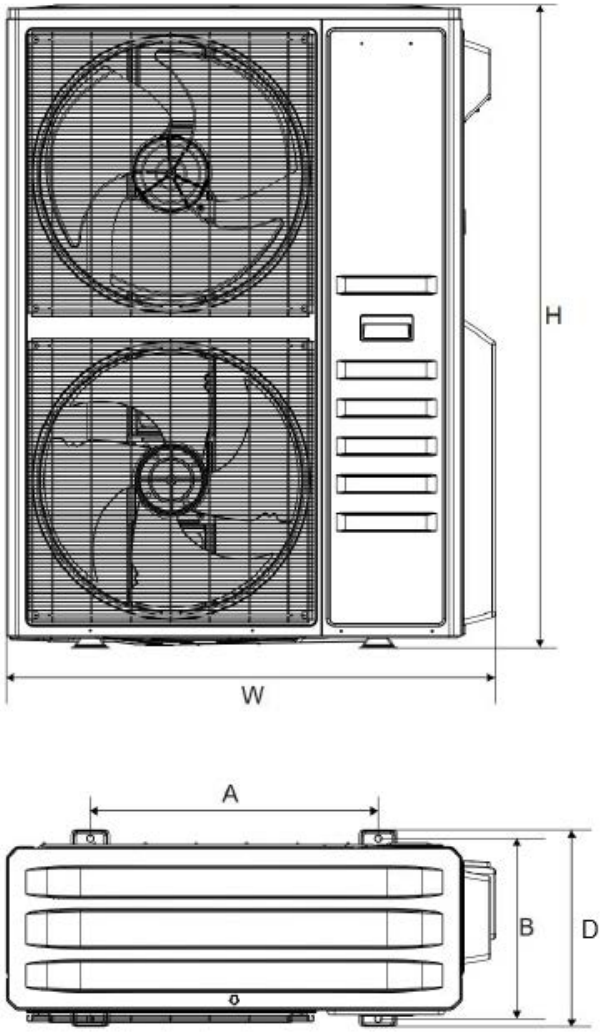


| Model Number | Dimensions | | | | |
|---|---|---|---|---|---|
| | W | D | H | A | B |
| YN020GLSI24M2G | 36-1/2 in | 15 in | 27-1/2 in | 23-1/8 in | 13-3/4 in |
| | 927 mm | 380 mm | 699 mm | 586 mm | 348 mm |
| YN030GLSI24M3G | 38-1/2 in | 16-5/8 in | 31-5/8 in | 23-7/8 in | 15-3/8 in |
| | 978 mm | 421 mm | 803 mm | 607 mm | 390 mm |
| YN040GLSI24M4G | 42-1/4 in | 18-3/8 in | 33-5/8 in | 26 in | 18-1/4 in |
| | 1,074 mm | 468 mm | 853 mm | 660 mm | 462 mm |
| YN050GLSI24M5G | 42-1/4 in | 18-3/8 in | 33-5/8 in | 26 in | 18-1/4 in |
| | 1,074 mm | 468 mm | 853 mm | 660 mm | 462 mm |
| YN060GLSI24M6G | 40-1/8 in | 16-1/8 in | 52-5/8 in | 23-5/8 in | 14-3/4 in |
| | 1,020 mm | 409 mm | 1,338 mm | 600 mm | 375 mm |

| Model Number | Net Unit Weight |
|---|---|
| YN020GLSI24M2G | 92.6 lbs |
| | 42 kgs |
| YN030GLSI24M3G | 119.0 lbs |
| | 54 kgs |
| YN040GLSI24M4G | 145.5 lbs |
| | 66 kgs |
| YN050GLSI24M5G | 174.2 lbs |
| | 79 kgs |
| YN060GLSI24M6G | 249.1 lbs |
| | 113 kgs |

# Compatibility Information

# 5

## Allowable Zone Combinations for Multi-Circuit Systems

| Outdoor Unit Model Number | YN020GLSI24M2G | YN030GLSI24M3G | YN040GLSI24M4G | YN050GLSI24M5G | YN060GLSI24M6G |
|---|---|---|---|---|---|
| **Number of Available Zones** | **Two (2)** | **Three (3)** | **Four (4)** | **Five (5)** | **Six (6)** |
| **Two Zones Utilized** (Allowable Combinations in kBTU) | 9 + 9<br>12 + 9<br>12 + 12<br>18 + 9 | 9 + 9<br>18 + 9<br>12 + 12<br>24 + 12<br>12 + 9<br>24 + 9<br>18 + 12<br>18 + 18 | 9 + 9<br>18 + 9<br>12 + 12<br>24 + 12<br>24 + 18<br>12 + 9<br>24 + 9<br>18 + 12<br>18 + 18<br>24 + 24 | 9 + 9<br>18 + 9<br>12 + 12<br>24 + 12<br>24 + 18<br>12 + 9<br>24 + 9<br>18 + 12<br>18 + 18<br>24 + 24 | 9 + 18<br>9 + 24<br>9 + 36<br>12 + 12<br>12 + 18<br>12 + 24<br>12 + 36<br>18 + 18<br>18 + 24<br>18 + 36<br>24 + 24<br>24 + 36 |
| **Three Zones Utilized** (Allowable Combinations in kBTU) | | 9 + 9 + 9<br>12 + 9 + 9<br>18 + 9 + 9<br>12 + 12 + 9<br>18 + 12 + 9<br>12 + 12 + 12 | 9 + 9 + 9<br>9 + 9 + 18<br>9 + 12 + 18<br>12 + 12 + 12<br>12 + 12 + 24<br>9 + 9 + 12<br>9 + 12 + 12<br>9 + 12 + 24<br>12 + 12 + 18<br>12 + 18 + 18 | 9 + 9 + 9<br>18 + 9 + 9<br>18 + 12 + 9<br>18 + 18 + 9<br>24 + 24 + 9<br>18 + 12 + 12<br>18 + 18 + 12<br>24 + 24 + 12<br>24 + 18 + 18<br>12 + 9 + 9<br>12 + 12 + 9<br>24 + 12 + 9<br>24 + 18 + 9<br>12 + 12 + 12<br>24 + 12 + 12<br>24 + 18 + 12<br>18 + 18 + 18 | 9+9+12<br>9+9+18<br>9+9+24<br>9+9+36<br>9+12+12<br>9+12+18<br>9+12+24<br>9+12+36<br>9+18+18<br>9+18+24<br>9+18+36<br>9+24+24<br>9+24+36<br>12+12+12<br>12+12+18<br>12+12+24<br>12+12+36<br>12+18+18<br>12+18+24<br>18+18+18 |
| **Four Zones Utilized** (Allowable Combinations in kBTU) | | | 9 + 9 + 9 + 9<br>12 + 9 + 9 + 9<br>12 + 12 + 9 + 9<br>12 + 12 + 12 +9<br>12 + 12 + 12 + 12<br>18 + 9 + 9 + 9<br>18 + 12 + 9 + 9 | 9 + 9 + 9 + 9<br>12 + 9 + 9 + 9<br>18 + 9 + 9 + 9<br>12 + 12 + 9 + 9<br>18 + 12 + 9 + 9<br>12 + 12 + 12 + 9<br>18 + 12 + 12 + 9<br>24 + 12 + 12 + 9<br>24 + 18 + 12 + 9<br>12 + 12 + 12 + 12<br>18 + 12 + 12 + 12<br>24 + 12 + 12 + 12<br>18 + 18 + 12 + 12 | 9+9+9+9<br>9+9+9+12<br>9+9+9+18<br>9+9+9+24<br>9+9+12+12<br>9+9+12+18<br>9+9+12+24<br>9+9+18+18<br>9+9+18+24<br>9+12+12+12<br>9+12+12+18<br>9+12+12+24<br>9+12+18+18<br>9+12+18+24<br>12+12+12+12<br>12+12+12+18<br>12+12+12+24<br>12+12+18+18<br>12+12+18+24 |
| **Five Zones Utilized** (Allowable Combinations in kBTU) | | | | 9 + 9 + 9 + 9 + 9<br>12 + 9 + 9 + 9 + 9<br>18 + 9 + 9 + 9 + 9<br>24 + 9 + 9 + 9 + 9<br>12 + 12 + 9 + 9 + 9<br>18 + 12 + 9 + 9 + 9<br>24 + 12 + 9 + 9 + 9<br>18 + 18 + 9 + 9 + 9<br>12 + 12 + 12 + 9 + 9<br>18 + 12 + 12 + 9 + 9<br>12 + 12 + 12 + 12 + 9<br>18 + 12 + 12 + 12 + 9<br>12 + 12 + 12 + 12 + 12 | 9+9+9+9+9<br>9+9+9+9+12<br>9+9+9+9+18<br>9+9+9+9+24<br>9+9+9+12+12<br>9+9+9+12+18<br>9+9+9+12+24<br>9+9+9+18+18<br>9+9+9+18+24<br>9+9+12+12+12<br>9+9+12+12+18<br>9+9+12+12+24<br>9+9+12+18+18<br>9+9+12+18+24<br>12+12+12+12+12<br>12+12+12+12+18<br>12+12+12+12+24 |
| **Six Zones Utilized** (Allowable Combinations in kBTU) | | | | | 9+9+9+9+9+9<br>9+9+9+9+9+12<br>9+9+9+9+9+18<br>9+9+9+9+9+24<br>9+9+9+9+12+12<br>9+9+9+12+12+18<br>9+9+9+12+12+12<br>9+9+9+12+12+18<br>9+9+12+12+12+12<br>9+12+12+12+12+12<br>12+12+12+12+12+12 |

# Compatibility Information 5

## Notes

### *System Configuration*

- Different models of all matching indoor units can be combined together in any order to create a multi-zone system, up to a quantity of the number of available circuits.
- Not all available circuits need to be utilized with an attached indoor unit. 66% or higher of the total capacity utilization is recommended.
- The order in which indoor units are connected (by BTU rating) has no effect on system performance.

### *Indoor Unit Operation*

- Every indoor unit attached to a multi-zone system will operate at a variable, self-regulated capacity based on the actual demand measured from the zone it is serving (between 30–100% of its rated capacity), or will turn off as needed.

### *Outdoor Unit Operation*

- Outdoor units will also self-regulate their total output capacity based on the total demand read from all simultaneously running indoor units at any given moment, up to their maximum rated capacity.

### *Capacity Sizing Guidelines*

- With multi-zone systems, the total demand from the outdoor unit will almost never exceed 75% of the total available capacity of the combined indoor unit group, due to load fluctuations among the indoor units.
- Therefore, total attached indoor unit capacity can be selected up to 133% of the supporting outdoor unit's rated capacity.
- In rare cases where total demand from the combined group of indoor units exceeds the rated capacity of the outdoor unit, the capacity of each indoor unit will be reduced accordingly.
- For high-demand applications, maximum loading of units may need to be reduced by up to 20% to avoid under-performance risks during extreme conditions.

# Outdoor Unit Installation 6

## Installation Space Requirements

### One Outdoor Unit Installed

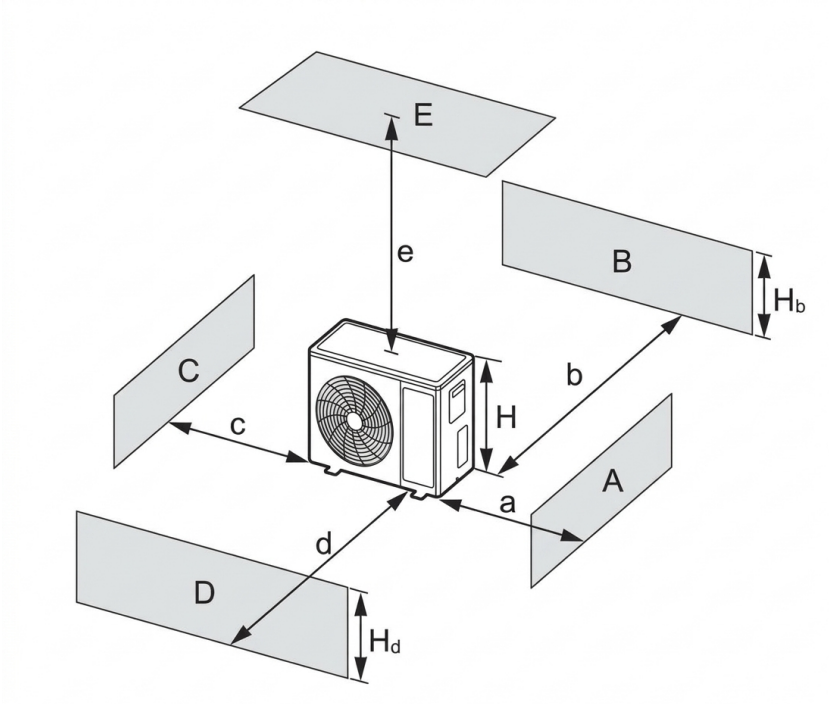

# Outdoor Unit Installation 6

| A~E | Hb / Hd / H | | inch (mm) | | | | |
|---|---|---|---|---|---|---|---|
| | | | a | b | c | d | e |
| B | —— | | —— | ≥ 3-⅞ (100) | —— | —— | —— |
| A, B, C | —— | | ≥ 11-¾ (300) | ≥ 3-⅞ (100) | ≥ 3-⅞ (100) | —— | —— |
| B, E | —— | | —— | ≥ 3-⅞ (100) | —— | —— | ≥ 39-⅜ (1,000) |
| A, B, C, E | —— | | ≥ 11-¾ (300) | ≥ 5-⅞ (150) | ≥ 5-⅞ (150) | —— | ≥ 39-⅜ (1,000) |
| D | —— | | —— | —— | —— | ≥ 39-⅜ (1,000) | —— |
| D, E | —— | | —— | —— | —— | ≥ 39-⅜ (1,000) | ≥ 39-⅜ (1,000) |
| B, D | Hb<Ha | Hd>H | —— | ≥ 3-⅞ (100) | —— | ≥ 39-⅜ (1,000) | —— |
| | Hb>Hd | Ha<H | —— | ≥ 3-⅞ (100) | —— | ≥ 39-⅜ (1,000) | —— |
| B, D, E | Hb<Ha | Hb≤1/2H | —— | ≥ 9-¾ (250) | —— | ≥ 78-¾ (2,000) | ≥ 39-⅜ (1,000) |
| | | 1/2H<Hb≤H | —— | ≥ 9-¾ (250) | —— | ≥ 78-¾ (2,000) | ≥ 39-⅜ (1,000) |
| | | Hb>H | Prohibited | | | | |
| | Hb>Ha | Ha≤1/2H | —— | ≥ 3-⅞ (100) | —— | ≥ 78-¾ (2,000) | ≥ 39-⅜ (1,000) |
| | | 1/2H<Hd≤H | —— | ≥ 7-⅞ (200) | —— | ≥ 78-¾ (2,000) | ≥ 39-⅜ (1,000) |
| | | Hd>H | Prohibited | | | | |

# Outdoor Unit Installation

# 6

**Two or More Outdoor Unit Installed Side-by-Side**

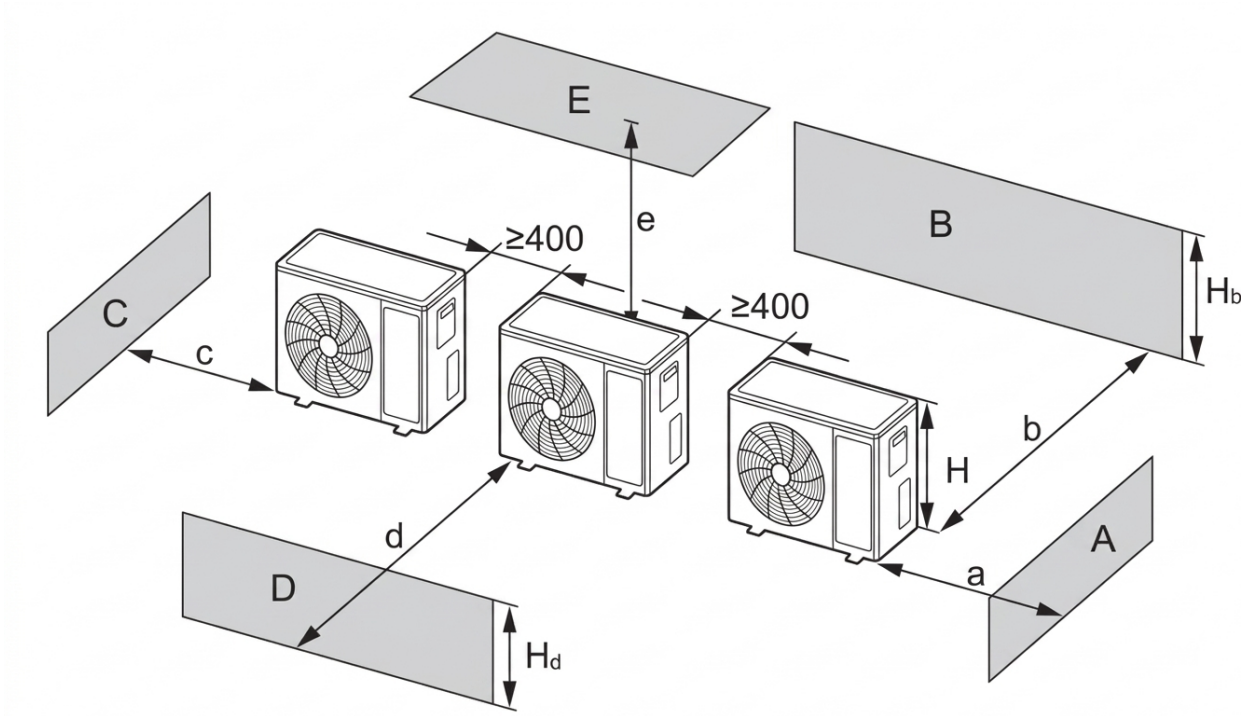

# Outdoor Unit Installation 6

| A~E | Hb / Hd / H | | inch (mm) | | | | |
|---|---|---|---|---|---|---|---|
| | | | a | b | c | d | e |
| A, B, C | —— | | ≥ 11-¾ (300) | ≥ 11-¾ (300) | ≥ 39-⅜ (1,000) | —— | —— |
| A, B, C, E | —— | | ≥ 11-¾ (300) | ≥ 11-¾ (300) | ≥ 39-⅜ (1,000) | —— | ≥ 39-⅜ (1,000) |
| D | —— | | —— | —— | —— | ≥ 78-¾ (2,000) | —— |
| D, E | —— | | | | | ≥ 78-¾ (2,000) | ≥ 39-⅜ (1,000) |
| B, D | Hb<Ha | Hd>H | —— | ≥ 11-¾ (300) | —— | ≥ 78-¾ (2,000) | —— |
| | Hb>Ha | Hd≤1/2H | —— | ≥ 9-¾ (250) | —— | ≥ 78-¾ (2,000) | —— |
| | | 1/2H<Hd≤H | —— | ≥ 11-¾ (300) | —— | ≥ 98-⅜ (2,500) | —— |
| B, D, E | Hb<Ha | Hb≤1/2H | —— | ≥ 11-¾ (300) | —— | ≥ 78-¾ (2,000) | ≥ 39-⅜ (1,000) |
| | | 1/2H<Hb≤H | —— | ≥ 11-¾ (300) | —— | ≥ 98-⅜ (2,500) | ≥ 39-⅜ (1,000) |
| | | Hb>H | Prohibited | | | | |
| | Hb>Ha | Hd≤1/2H | —— | ≥ 9-¾ (250) | —— | ≥ 98-⅜ (2,500) | ≥ 39-⅜ (1,000) |
| | | 1/2H<Hd≤H | —— | ≥ 11-¾ (300) | —— | ≥ 98-⅜ (2,500) | ≥ 39-⅜ (1,000) |
| | | Hd>H | Prohibited | | | | |

# Outdoor Unit Installation

# 6

**Outdoor Units Installed in Rows**

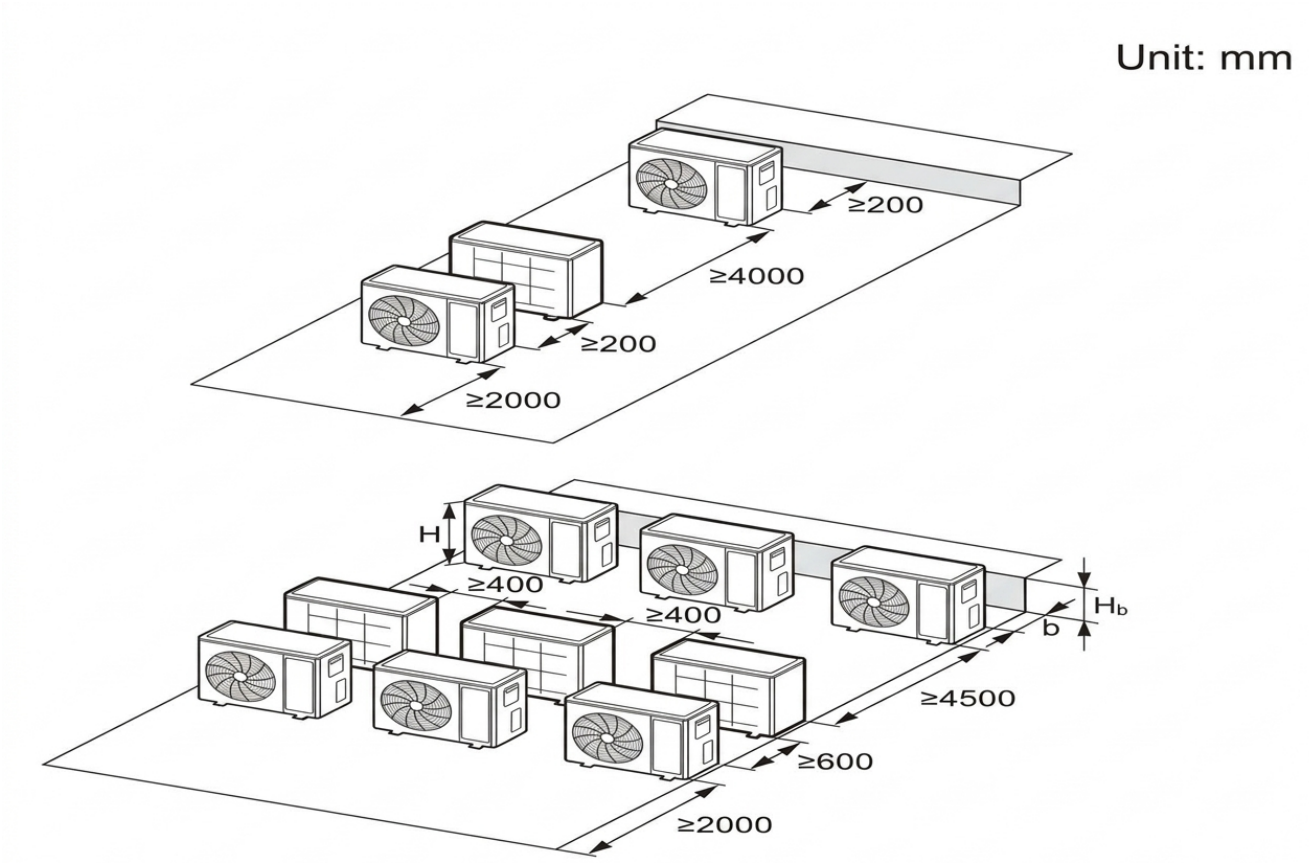


| Hb/H | inch (mm) |
|---|---|
| Hb≤1/2H | b≥ 9-¾ (250) |
| 1/2H<Hb≤H | b≥ 11-¾ (300) |
| Hb>H | Prohibited |

# Outdoor Unit Installation 6

**Outdoor Units Installed One Above Another**

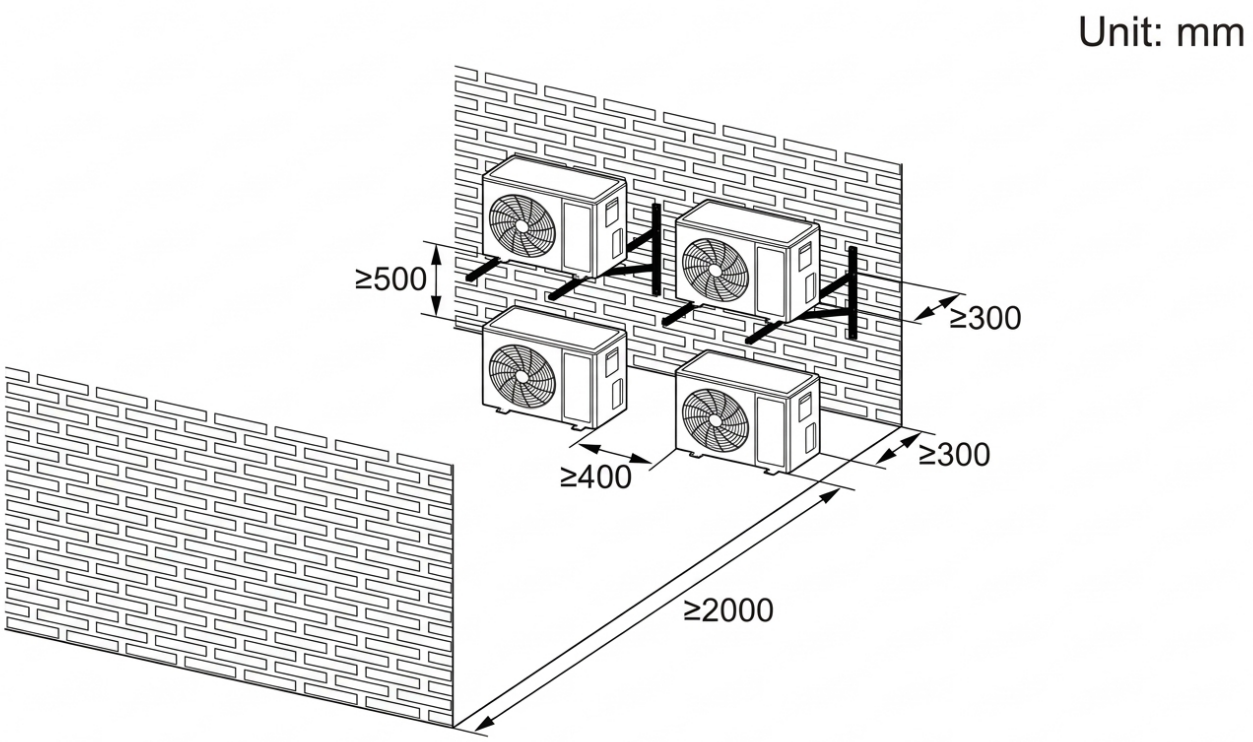


## Suggested Tools:

- Adjustable/Crescent Wrench
- Clamp-on Amp Meter
- Drill and Drill Bits
- Flaring Tool
- Hex Keys or Allen Wrenches
- Hole Saw
- Level
- Manifold and Gauges
- Micron Gauge
- Pipe Cutter
- Refrigerant Scale
- Safety Glasses
- Screw Drivers (Phillips & Flat Blade)
- Standard Wrench
- Torque Wrench
- Vacuum Pump
- Work Gloves

# Outdoor Unit Installation

6

## Installation Diagrams

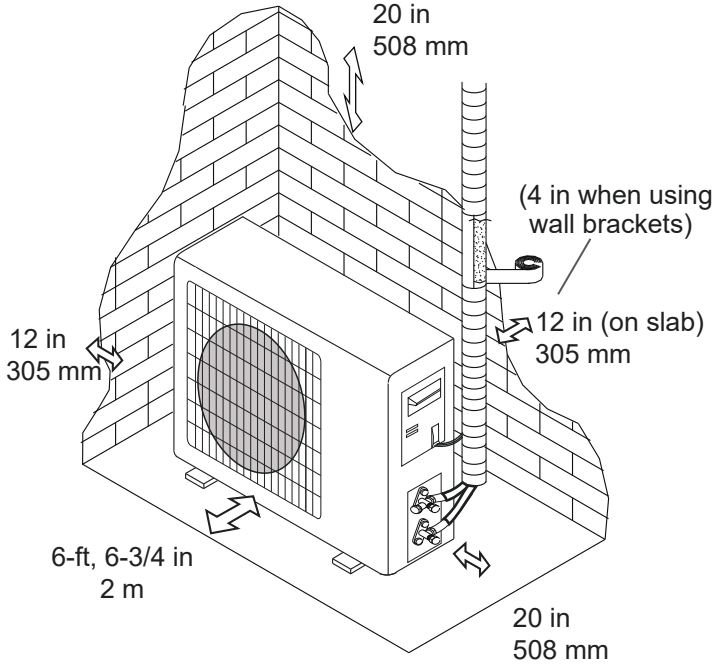


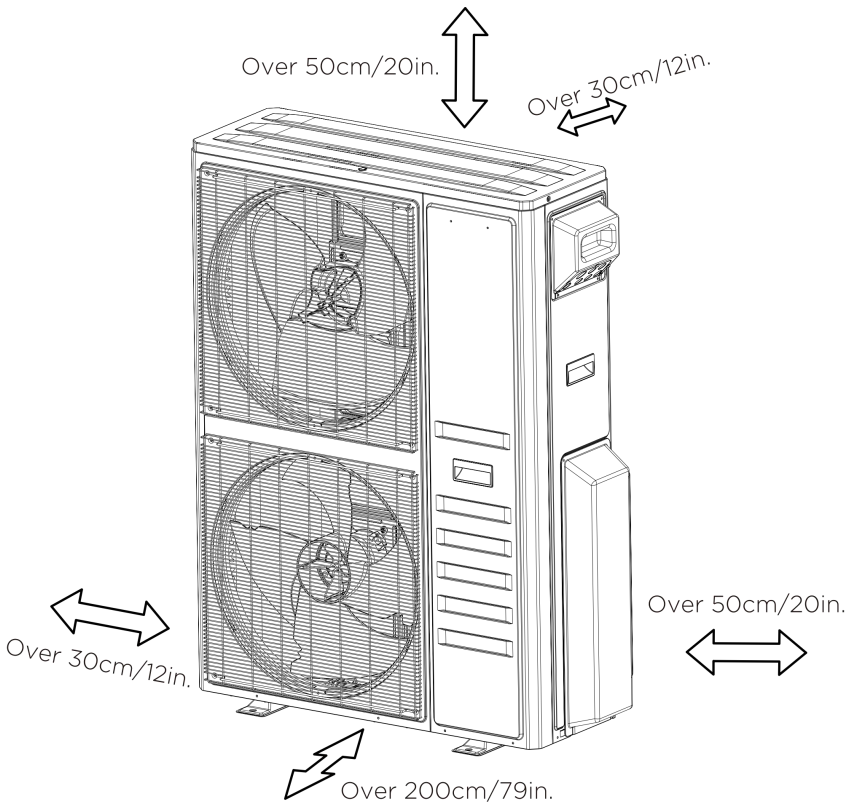

# Outdoor Unit Installation 6

## Connecting Refrigerant Piping for Multi-Circuit Condensers

- The process for connecting the copper refrigerant lines for the indoor and outdoor units is given in the Installation and User Manual for the respective indoor unit.
- Refer to the Installation and User Manual for proper torque values.
- Repeat the connection and leak-checking process according to the number of zones to be installed.
- All pipe sets use a 1/4 inch diameter for the liquid (smaller) side.
- The gas (larger) line may require adapters to convert the 3/8 inch size to 1/2 inch or 5/8 inch.
- Use the included adapters according to the intended zone combination.

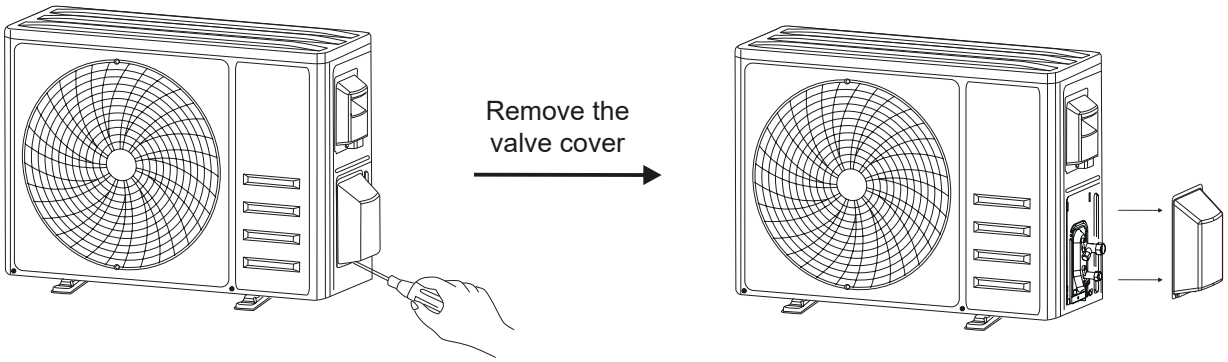


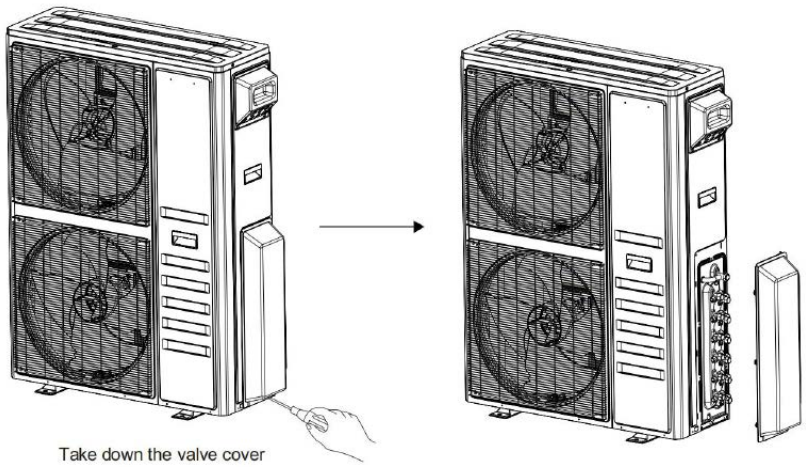


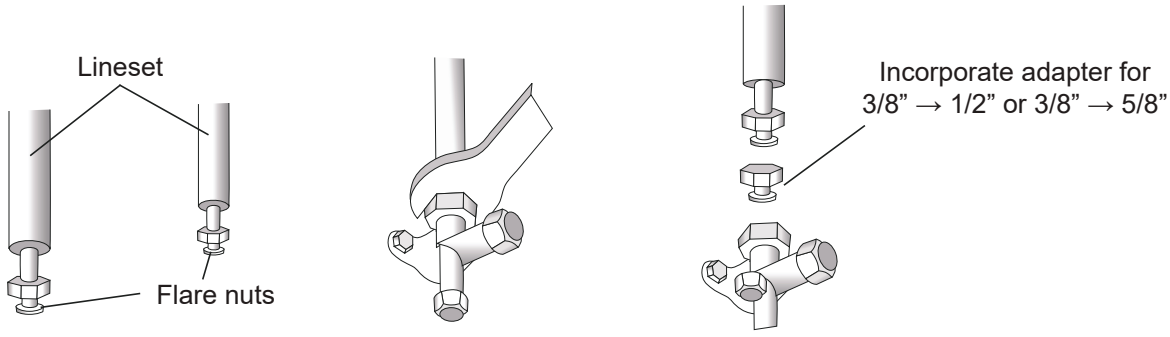

# Outdoor Unit Installation 6

## Power Wiring Information

Applies to 2-zone, 3-zone, 4-zone, 5-zone, 6-zone multi-zone systems.

1. Use a Phillips screwdriver to remove the wiring cover. Grip and gently press down to release and remove the cover.
2. Unscrew and remove the cable clamp.
3. Refer to the wiring diagram located on the inside of the wiring cover. Connect the wires to the corresponding terminals, ensuring all connections are secure and properly tightened.
4. Reinstall the cable clamp and wiring cover.

### Warning

- Before connecting wiring between the indoor and outdoor units, ensure the power supply is completely disconnected for a minimum of 2 minutes.

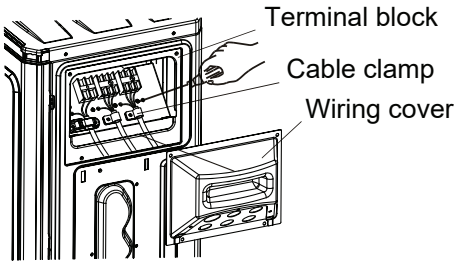


2-Zone System

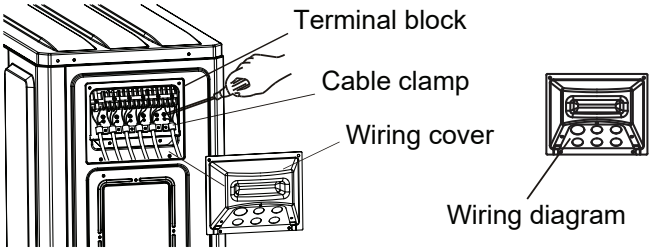


5-Zone System

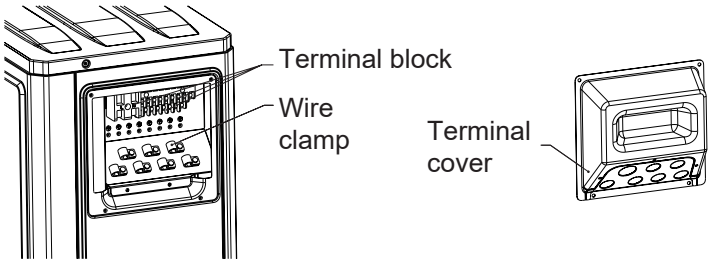


6-Zone System

# Outdoor Unit Installation 6

## Communication Cable Wiring Diagram for Multi-Circuit Condensers

Plug the connection cables into the corresponding terminals as shown below. Terminal A on the outdoor unit must be connected to Terminal A on the indoor unit (B to B, and so on).

### Note

- Cross-wiring is an easy mistake to make. Always double-check that the line from a given terminal block corresponds to the correct indoor unit.

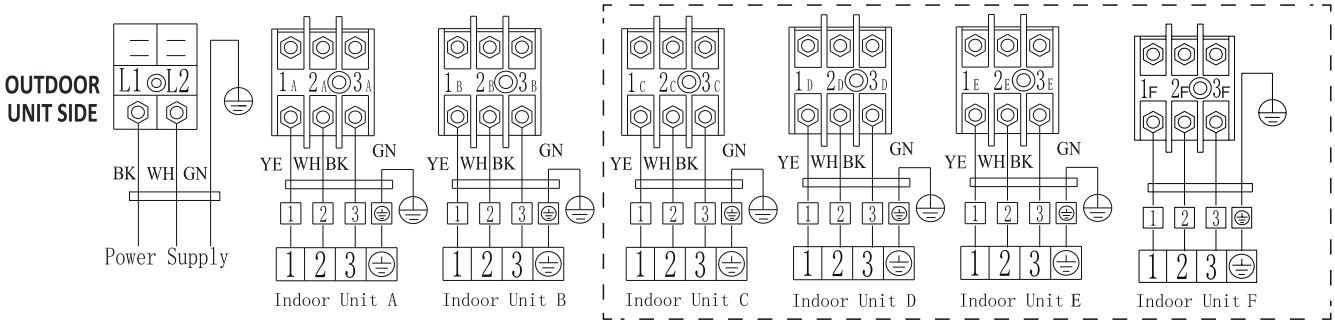


## Cable Wire Specifications

| YNL-24 Multi-Zone | | 2-Zone | 3-Zone | 4-Zone | 5-Zone | 6-Zone |
|---|---|---|---|---|---|---|
| | | Sectional Area (AWG) | | | | |
| Power Supply Cable | L2 | 12 AWG | 10 AWG | 10 AWG | 8 AWG | 8 AWG |
| | L1 | | | | | |
| | ⏚ | | | | | |
| Communication Cable Between Indoor and Outdoor Units | 3 (L) | 16 AWG | 16 AWG | 16 AWG | 16 AWG | 16 AWG |
| | 2 (N) | | | | | |
| | 1 (S) | | | | | |
| | ⏚ | | | | | |

- Consult the nameplate on the system for detailed electrical specifications.
- Confirm wiring based on breaker. Above power wire sizes assume largest allowable fuse.
- 203V requires a double-pole breaker (tandem-type will not work)

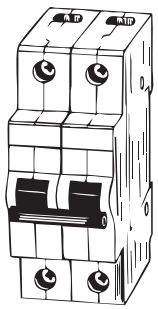

Double-Pole
230V Breaker

# Outdoor Unit Installation 6

## Allowable Connected Piping Length / Elevation Differences

When installing multiple indoor units with a single outdoor unit, ensure that the refrigerant pipe length and drop height between the indoor and outdoor units meet the requirements shown in the diagram below.

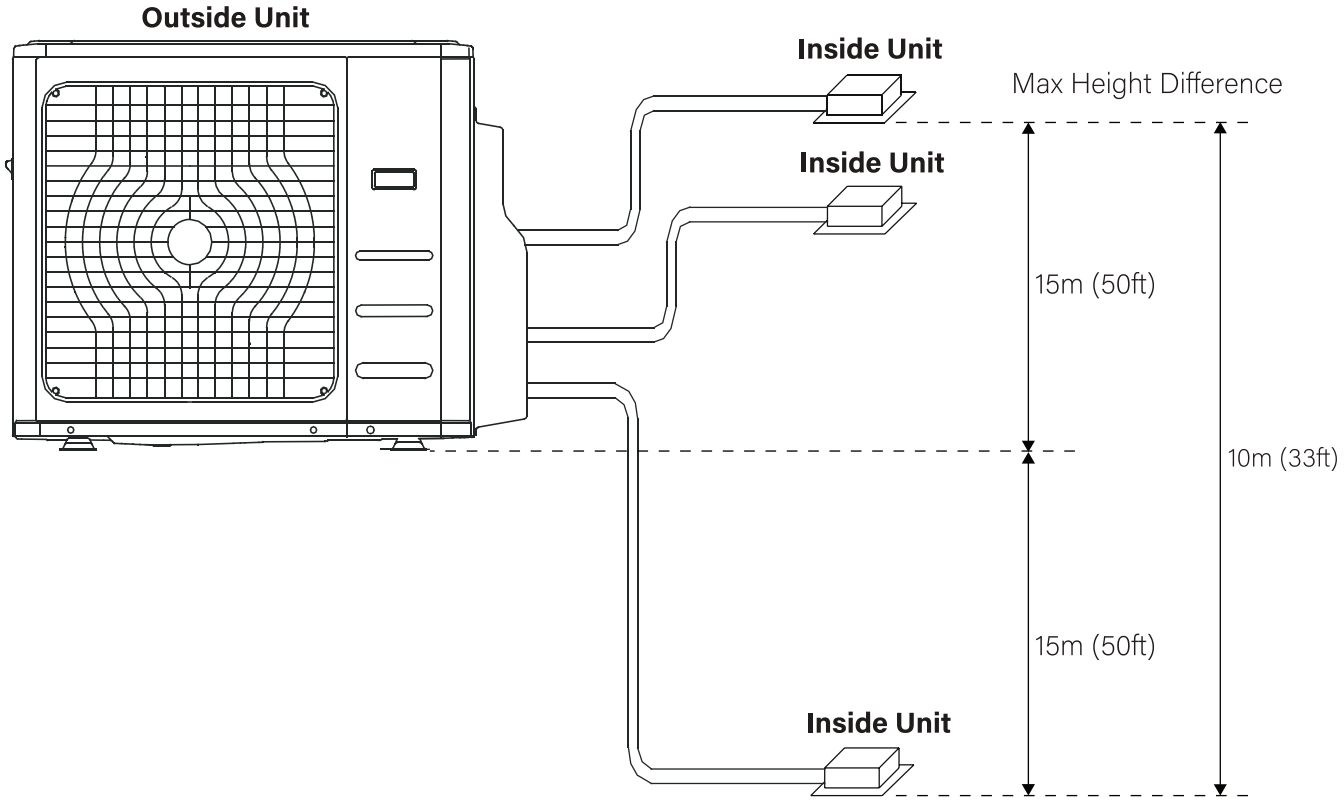


| Unit Type | 2-Zone | 3-Zone | 4-Zone | 5-Zone | 6-Zone |
|---|---|---|---|---|---|
| Max. combined length for all rooms (total attached piping) | 131 ft / 40 m | 200 ft / 60 m | 265 ft / 80 m | 300 ft / 90 m | 394 ft / 120 m |
| Max. length for one indoor unit (longest zone length) | 82 ft / 25 m | 98 ft / 30 m | 98 ft / 30 m | 98 ft / 30 m | 98 ft / 30 m |
| Max. elevation difference between indoor/outdoor unit | 49 ft / 15 m | 49 ft / 15 m | 49 ft / 15 m | 49 ft / 15 m | 49 ft / 15 m |
| Max. elevation difference between any two indoor units | 33 ft / 10 m | 33 ft / 10 m | 33 ft / 10 m | 33 ft / 10 m | 33 ft / 10 m |
| Length of total pipe supported by factory precharge | 49 ft / 15 m | 75 ft / 22.5 m | 98 ft / 30 m | 125 ft / 37.5 m | 148 ft / 45 m |
| Type of Refrigerant | R-454B | | | | |

For installations with connected lengths beyond standard, charge additional R-454B based on the below:

| Unit Type (Model Number) | Amount of Refrigerant to Add (based on connected pipe lengths L) | |
|---|---|---|
| 2-Zone (YN020GLSI24M2G) | 0.11 oz (L1+L2-50 ft) | 10 g (L1+L2-15 m) |
| 3-Zone (YN030GLSI24M3G) | 0.11 oz (L1+L2+L3-75 ft) | 10 g (L1+L2+L3-22.5 m) |
| 4-Zone (YN040GLSI24M4G) | 0.11 oz (L1+L2+L3+L4-100 ft) | 10 g (L1+L2+L3+L4-30 m) |
| 5-Zone (YN050GLSI24M5G) | 0.11 oz (L1+L2+L3+L4+L5-125 ft) | 10 g (L1+L2+L3+L4+L5-37.5 m) |
| 6-Zone (YN060GLSI24M6G) | 0.11 oz (L1+L2+L3+L4+L5+L6-148 ft) | 10 g (L1+L2+L3+L4+L5+L6-45 m) |

# Outdoor Unit Installation 6

## Anchoring the Outdoor Unit

The outdoor unit can be anchored to the ground or to wall-mounted brackets. The following is a list of different outdoor unit sizes and the distance between their mounting feet. Prepare the installation base of the unit according to the dimensions found below:

| Model | W | D | H | X | Y |
|---|---|---|---|---|---|
| **YN020GLSI24M2G** (18,000 BTU / 2-Zone) | 36-1/2 in | 15 in | 27-1/2 in | 23-1/8 in | 13-3/4 in |
| | 927 mm | 380 mm | 699 mm | 586 mm | 348 mm |
| **YN030GLSI24M3G** (27,000 BTU / 3-Zone) | 38-1/2 in | 16-5/8 in | 31-5/8 in | 23-7/8 in | 15-3/8 in |
| | 978 mm | 421 mm | 803 mm | 607 mm | 390 mm |
| **YN040GLSI24M4G** (36,000 BTU / 4-Zone) | 42-1/4 in | 18-3/8 in | 33-5/8 in | 26 in | 18-1/4 in |
| | 1,074 mm | 468 mm | 853 mm | 660 mm | 462 mm |
| **YN050GLSI24M5G** (42,000 BTU / 5-Zone) | 42-1/4 in | 18-3/8 in | 33-5/8 in | 26 in | 18-1/4 in |
| | 1,074 mm | 468 mm | 853 mm | 660 mm | 462 mm |
| **YN060GLSI24M6G** (55,000 BTU / 6-Zone) | 40-1/8 in | 16-1/8 in | 52-5/8 in | 23-5/8 in | 14-3/4 in |
| | 1,020 mm | 409 mm | 1338 mm | 600 mm | 375 mm |

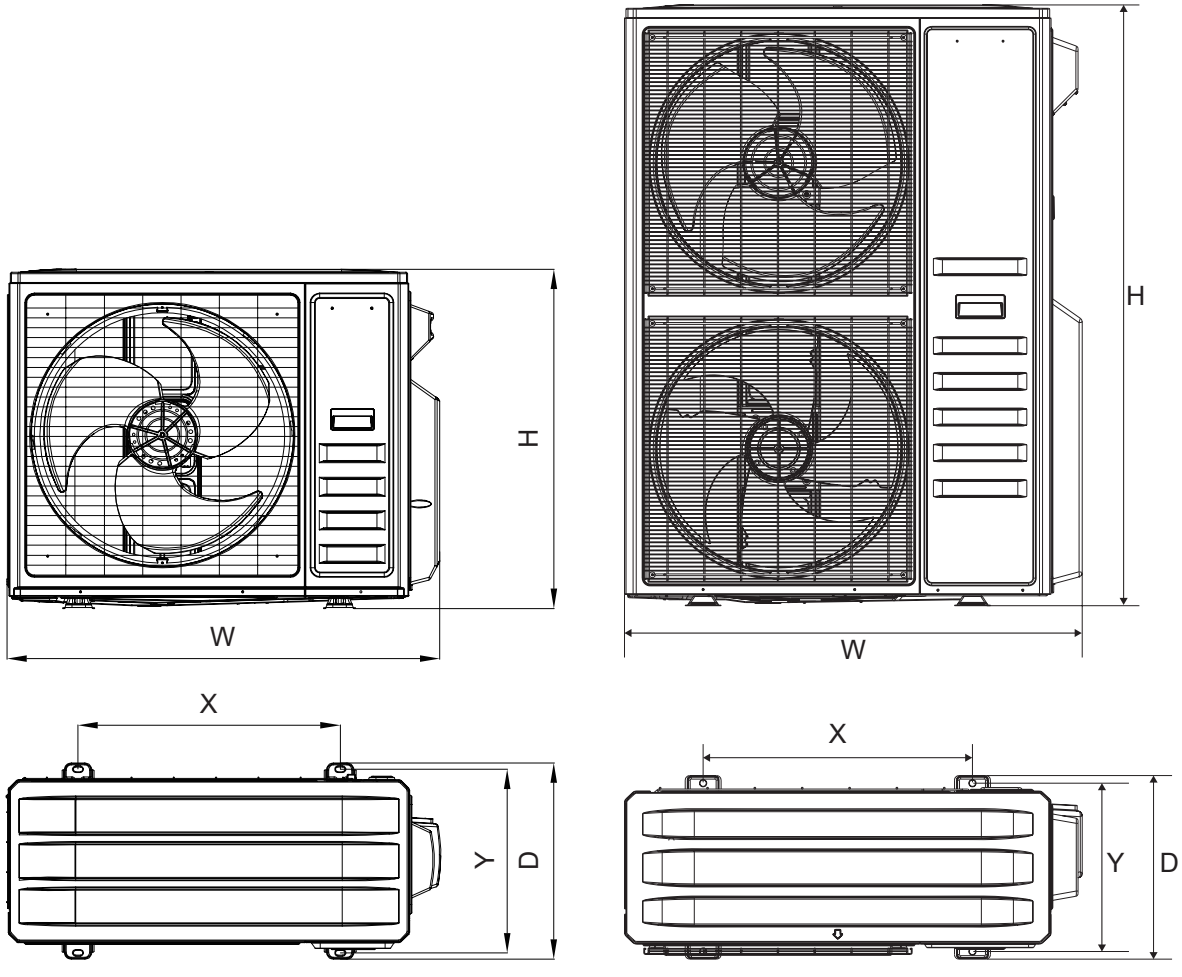

# Outdoor Unit Installation 6

## Ground or Concrete Mounting Platform Installation

If installing the unit on the ground or on a concrete mounting platform, complete the following:

### Warning

- When drilling into concrete, wear eye protection at all times.

1. Mark the positions for the four expansion bolts based on the dimensions in the "Anchoring the Outdoor Unit" chart.

2. Pre-drill holes for the expansion bolts.

3. Clean any concrete dust away from the holes.

4. Place a nut on the end of each expansion bolt.

5. Hammer the expansion bolts into each hole.

6. Remove the nuts from the expansion bolts and place the outdoor unit onto the bolts.

7. Put a washer onto each expansion bolt, then replace each of the nuts.

8. Use a wrench to tighten each nut until snug.

## Refrigerant Circuit Evacuation Procedures (2-Zone)

For 2-zone systems, the evacuation protocol is identical to that for single-zone systems; it is simply repeated once for the second zone. Consult the primary Installation and User Manual for the proper procedure.

## Refrigerant Circuit Evacuation Procedures (3/4/5/6-Zone)

For 3/4/5/6-zone systems, there is a set of Master (King) Valves in addition to the set of valves that corresponds to each zone/circuit. Therefore, the process differs slightly.

**Preparations & Precautions**

- Air and moisture inside the refrigerant circuit can lead to pressure abnormalities, reduced efficiency, equipment damage, and safety hazards.

- A vacuum pump and manifold gauge must be used to evacuate the system, removing non-condensable gases and moisture. This procedure is required during initial installation.

# Outdoor Unit Installation 6

**Before starting evacuation, verify the following:**

- All high-pressure and low-pressure pipes between indoor and outdoor units are connected correctly, as outlined in the "Connecting Refrigerant Piping for Multi-Circuit Condensers" section.
- All electrical wiring is securely connected.
- For Best Results: A 500 PSI nitrogen leak test has been performed on all refrigerant joints.

**Evacuation Procedure**

Before use, consult the operation manuals for your manifold gauge and vacuum pump to ensure correct setup and safe use. Ensure the gauge hoses are leak-free and each tube pin is properly extended.

**1. Connect the Equipment**

- Attach the refrigerant hose from the manifold gauge's low-pressure side to the master service valve on the outdoor unit.
- Connect the charge hose from the manifold gauge to the vacuum pump.
- If the refrigerant lines have been installed, open all low-pressure service valves (A2, B2, C2, etc.).

**Note**

- Do not open any high-pressure service valves (e.g., A1, B1, C1, etc.) at this stage.

**2. Start the Evacuation Process**

- Open the low-pressure knob on the manifold gauge. Ensure the high-pressure knob remains closed.
- Start the vacuum pump to begin evacuating the system.
- Continue vacuuming until the compound gauge reads -76 cmHg (-29.92 inHg or -101 kPa).
- For the best results, use a micron gauge and continue evacuating until the system pressure drops to 500 microns or less. Ideal target: 350-500 microns.

# Outdoor Unit Installation 6

**3. Stabilize & Check**

- Once the target vacuum is reached, close the low-pressure knob on the manifold and turn off the vacuum pump.
- Wait 10 to 15 minutes (ideally 1 hour), then verify that the system vacuum reading remains steady.
- If available, use a micron gauge to confirm that the pressure is still below 500 microns.

**4. Leak Check & Final Valve Operation**

A. If the vacuum level rises, refer to the Gas Leak Check section in the primary Installation and User Manual for information on inspecting for leaks.

B. If a leak is confirmed, remove the charge hose and repair the leakage point before repeating evacuation.

C. Once the vacuum holds, use an Allen wrench to fully open the master valves (M1, M2) and the high-pressure service valves (A1, B1, C1, etc.).

D. Tighten all valve caps (master valve, high side, and low side service valves) by hand.

E. Use a torque wrench if necessary for a more secure seal.

## Notes

- Always open service valves slowly.
- When opening, turn the Allen wrench until it meets resistance from the stopper. Do not over-tighten.

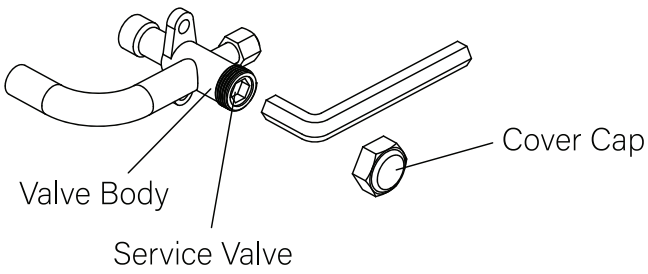

# Outdoor Unit Installation

6

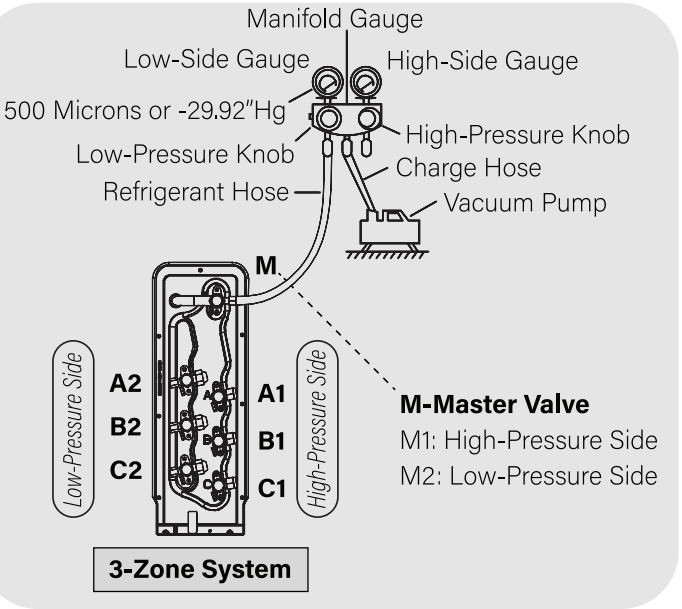


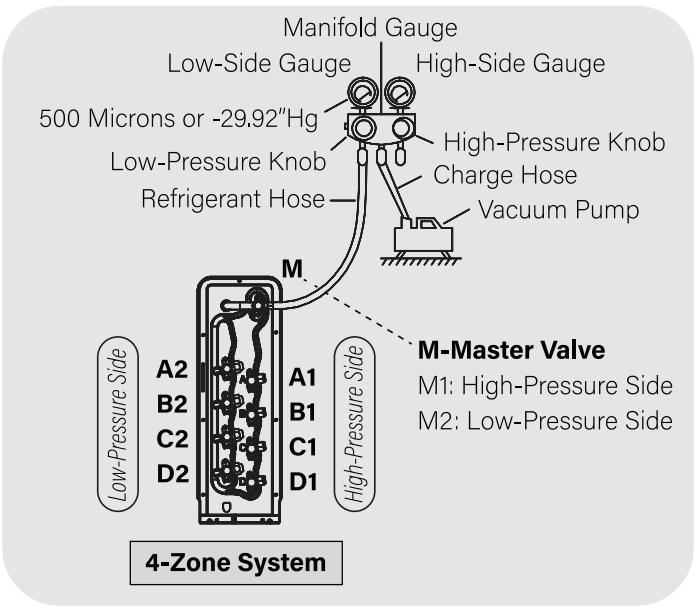


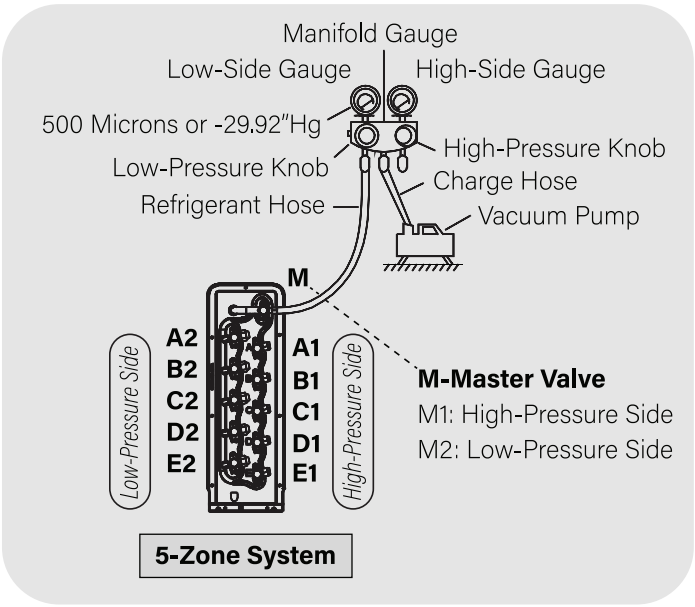


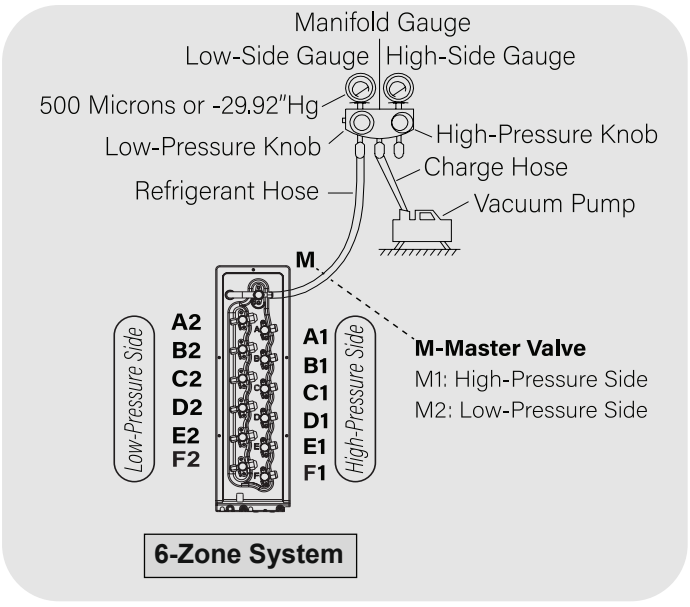

# Control Board Wiring Diagrams

7

## Outdoor Condensing Unit Control Board Wiring Diagrams

### YN020GLSI24M2G

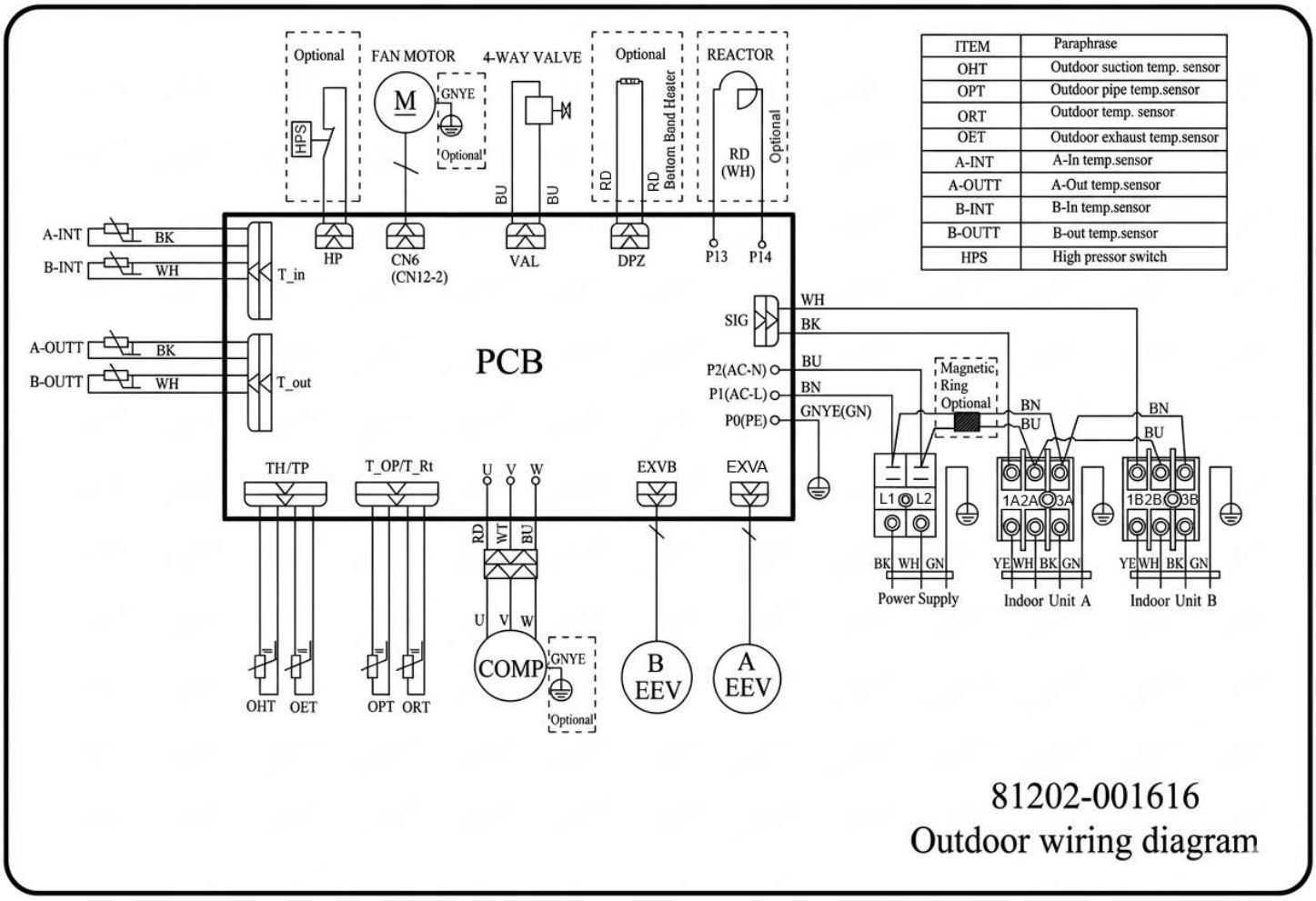

# Control Board Wiring Diagrams 7

**YN030GLSI24M3G**

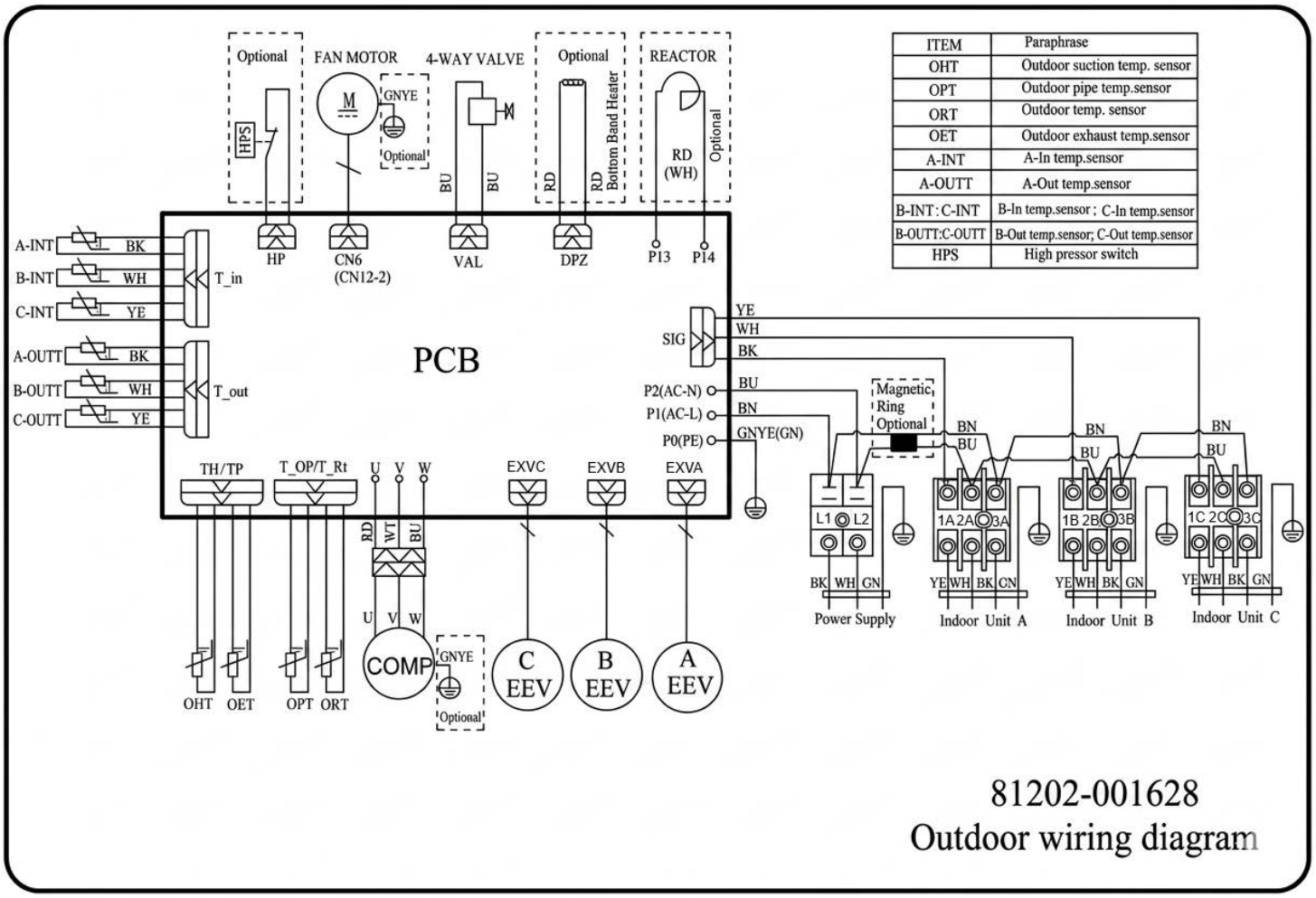

# Control Board Wiring Diagrams 7

## YN040GLSI24M4G

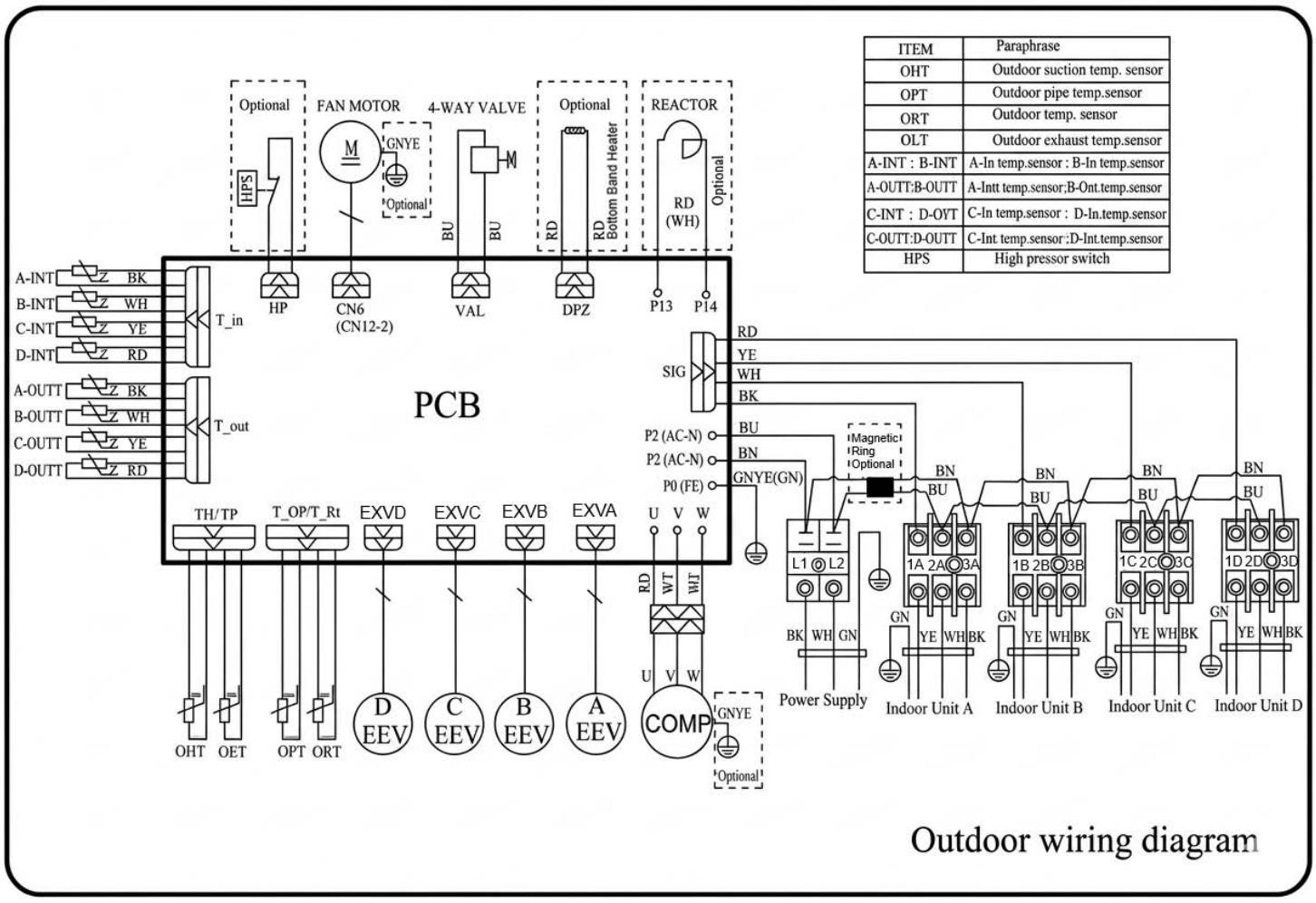

# Control Board Wiring Diagrams 7

**YN050GLSI24M5G**

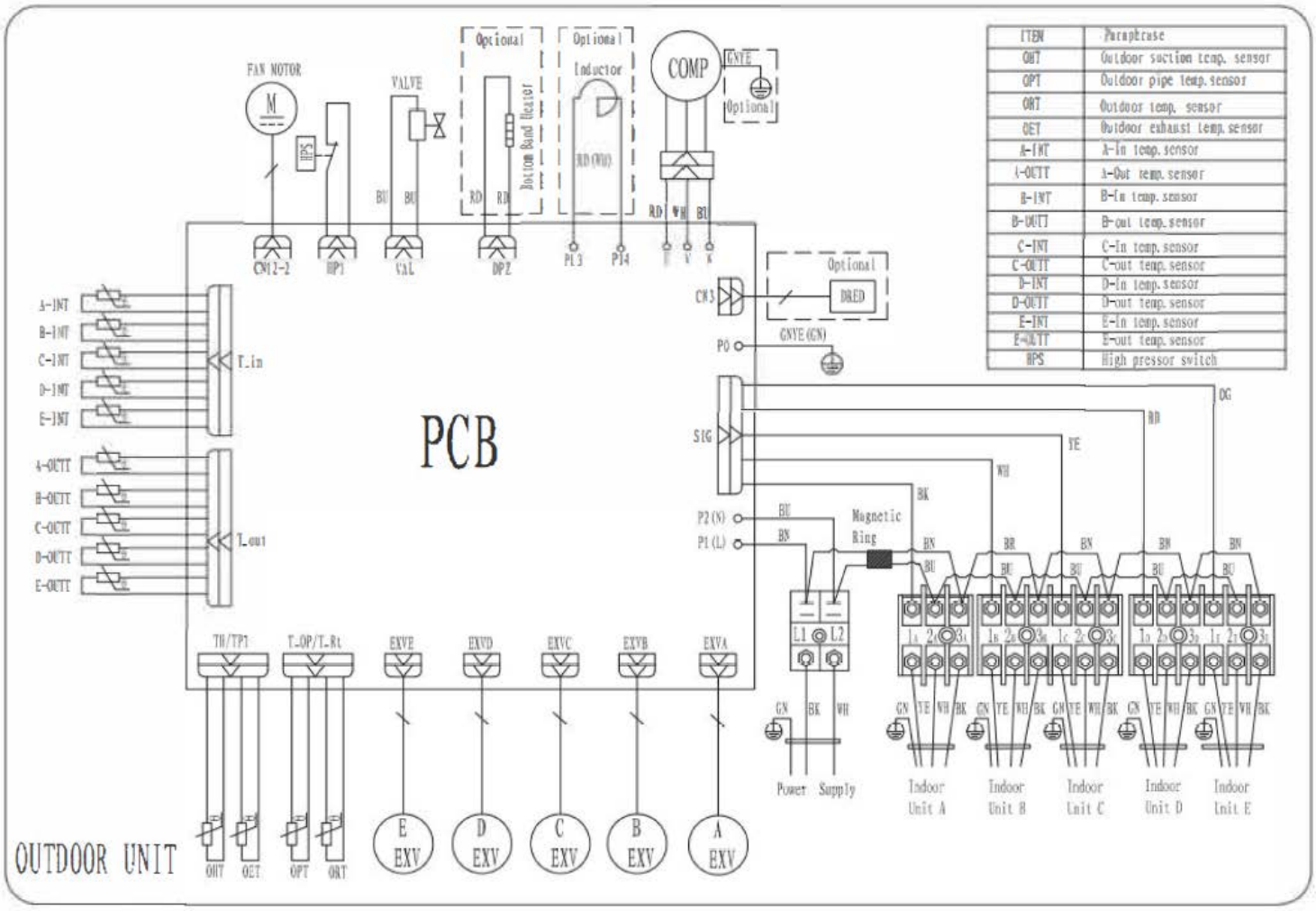

# Control Board Wiring Diagrams

7

## YN060GLSI24M6G

### Control Board A

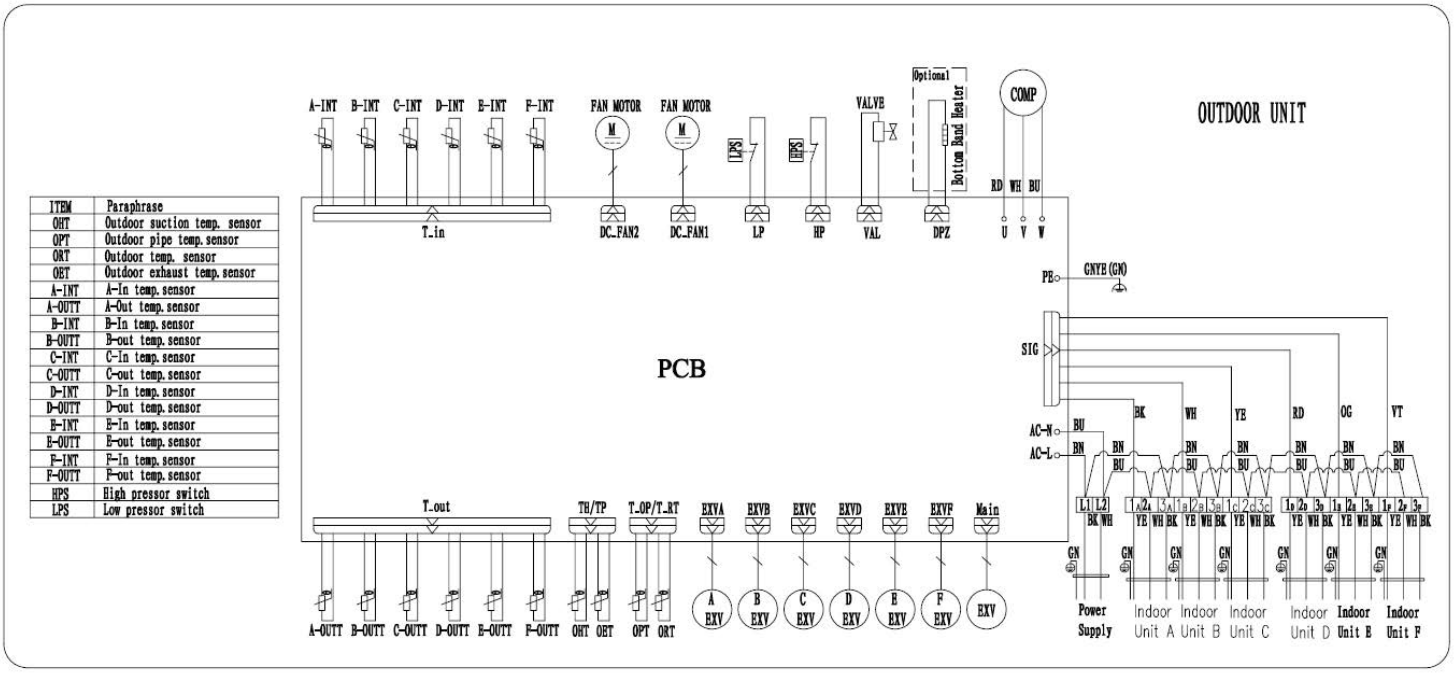

# Control Board Wiring Diagrams 7

## YN060GLSI24M6G

### Control Board B

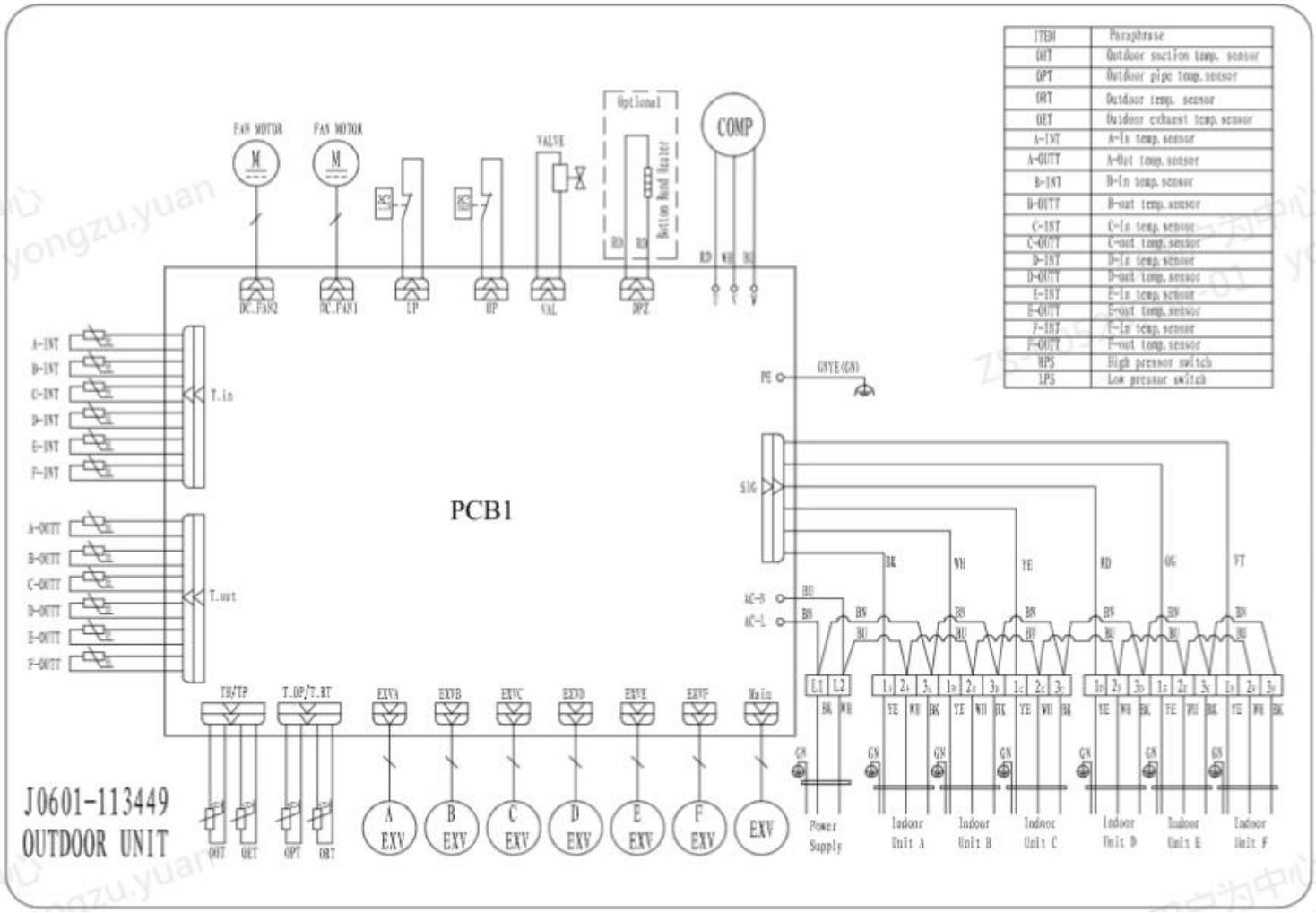

# PCB Printed Diagrams

# 8

## YN020GLSI24M2G, YN030GLSI24M3G, YN040GLSI24M4G

| No. | Name |
|---|---|
| 1 | 4-way Valve |
| 2 | Heater |
| 3 | L, N & Communication |
| 4 | Fuse |
| 5 | PCB Main Relay |

| No. | Name |
|---|---|
| 6 | DC and AC Motor Connector |
| 7 | Discharge Sensor Connector |
| 8 | OAT/OPT Sensor Connector |
| 9 | LED5 |
| 10 | - - - |

**Top View**

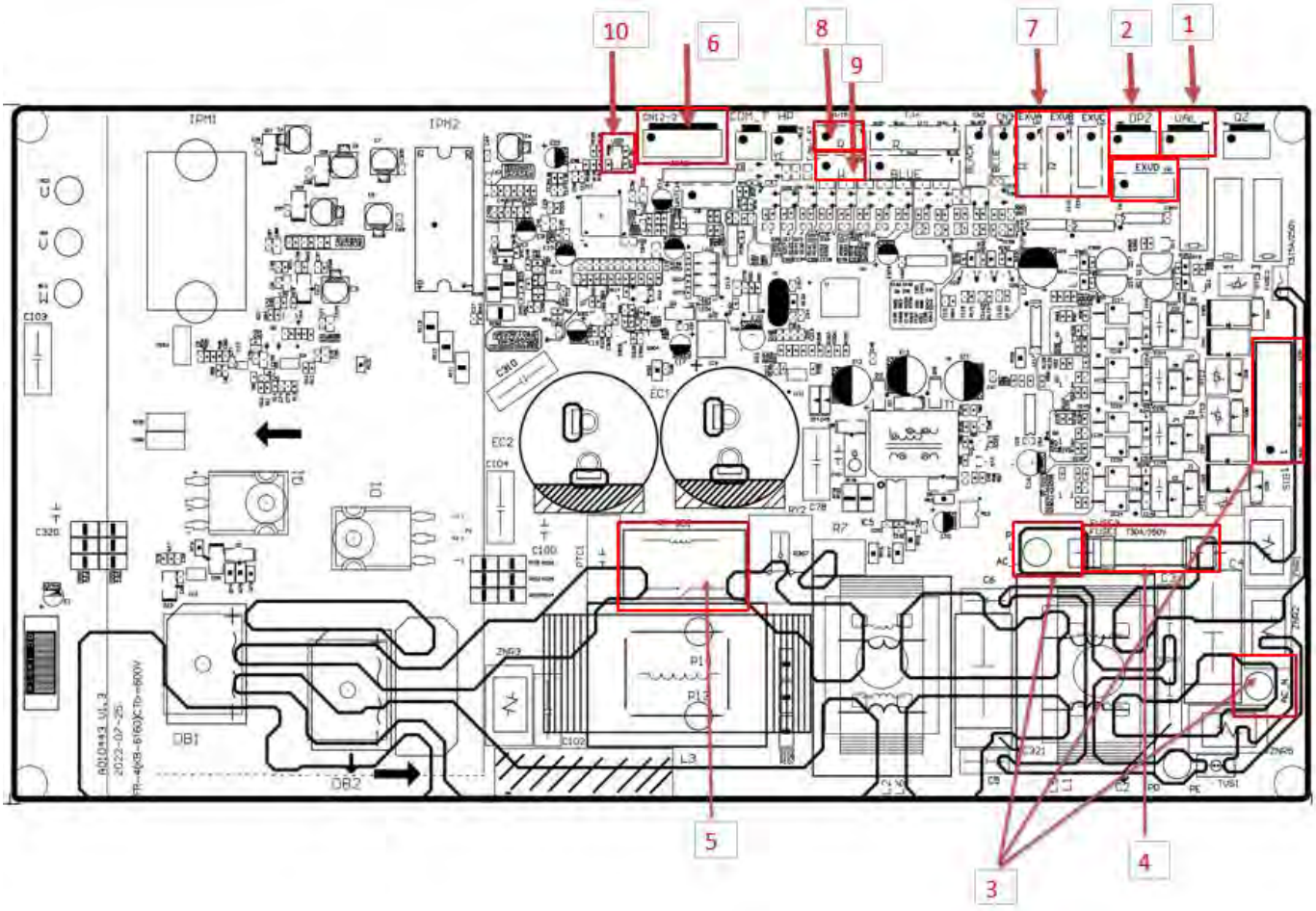

# PCB Printed Diagrams

# 8

## YN020GLSI24M2G, YN030GLSI24M3G, YN040GLSI24M4G

### Bottom View

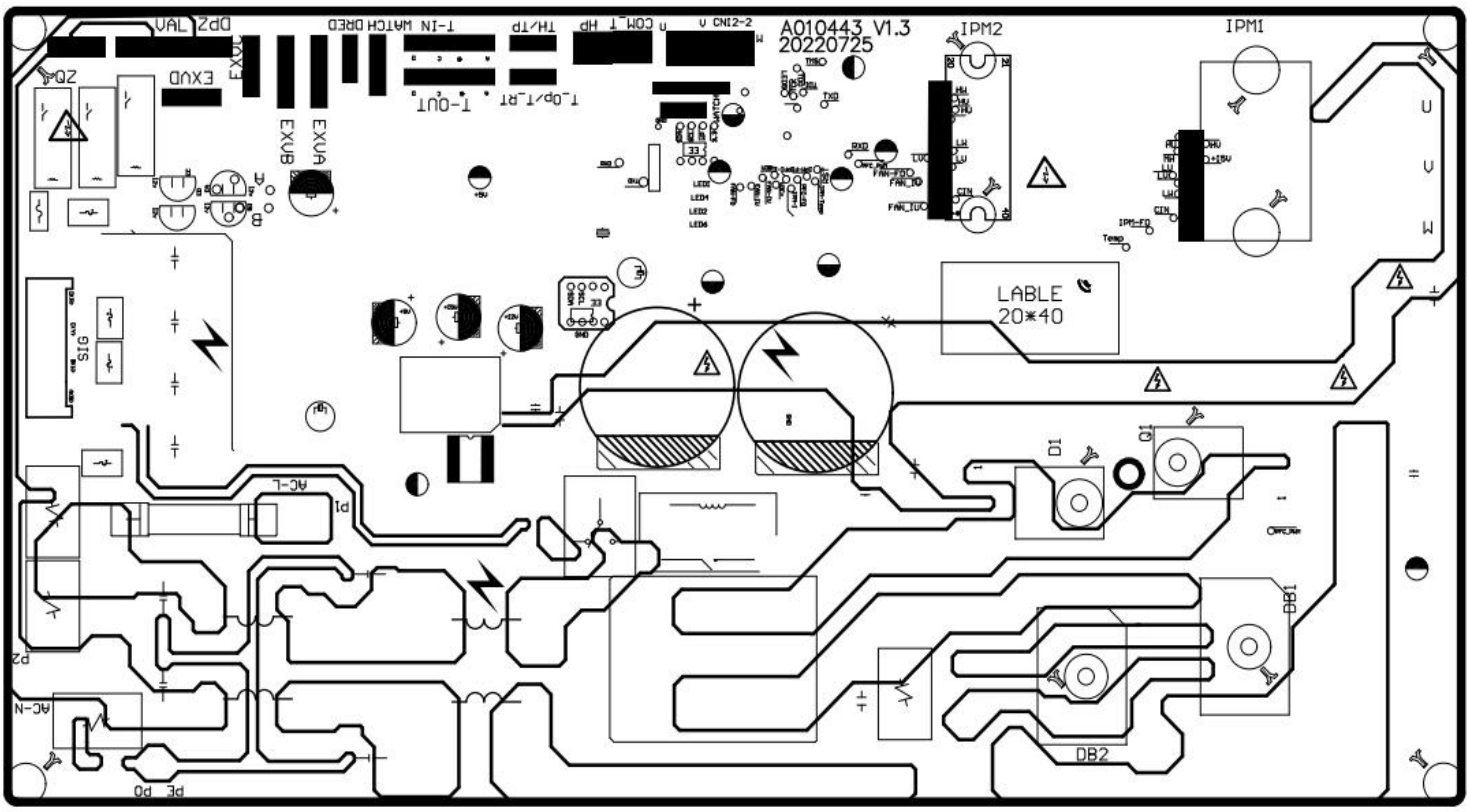

# PCB Printed Diagrams

# 8

## YN050GLSI24M5G

| No. | Name |
|---|---|
| 1 | 4-way Valve |
| 2 | Heater |
| 3 | L, N & Communication |
| 4 | Fuse |
| 5 | PCB Main Relay |

| No. | Name |
|---|---|
| 6 | DC and AC Motor Connector |
| 7 | Electronic Expansion Valve |
| 8 | Discharge Sensor Connector |
| 9 | OAT/OPT Sensor Connector |
| 10 | LED5 |

**Top View**

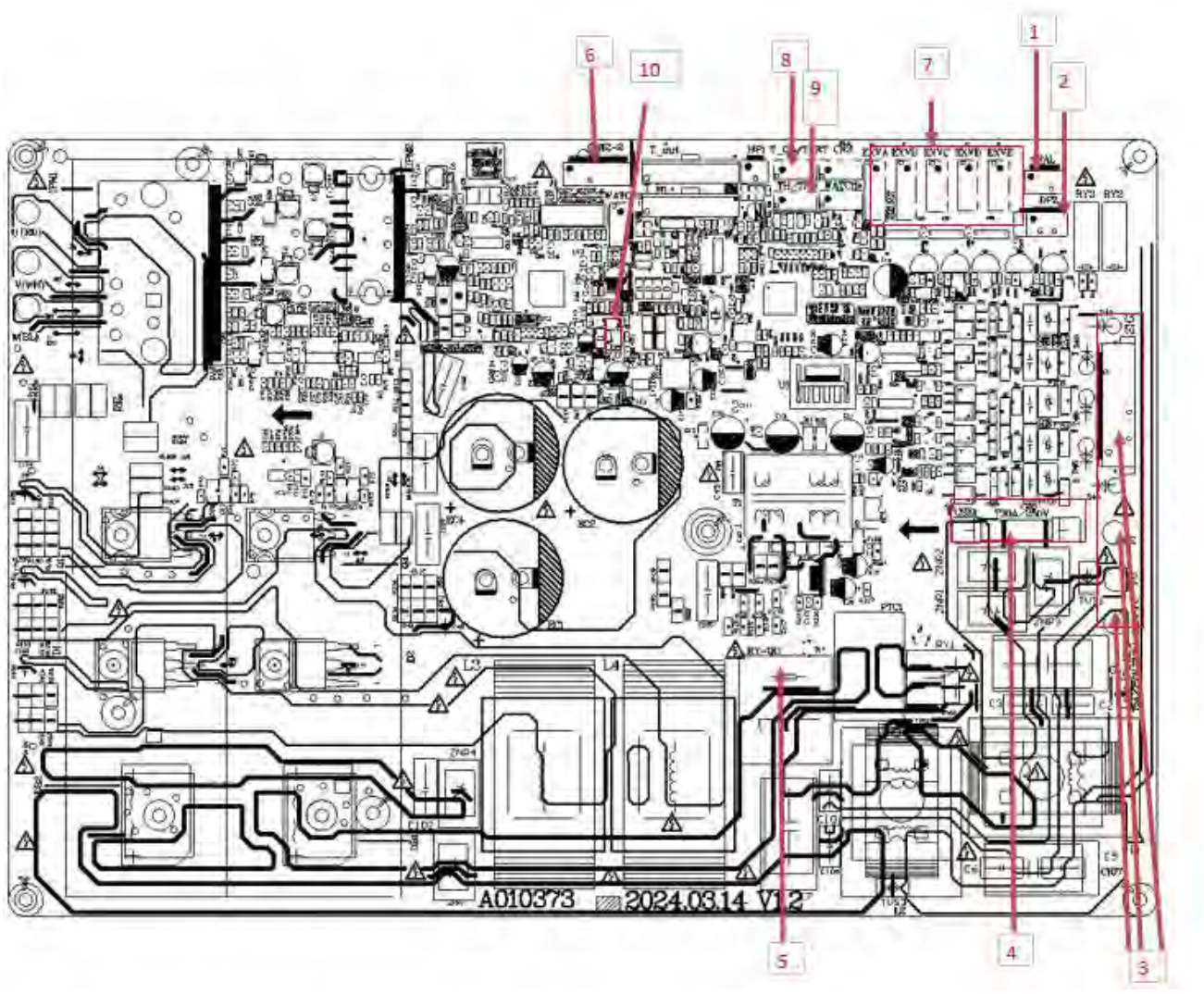

# PCB Printed Diagrams

# 8

## YN050GLSI24M5G

### Bottom View

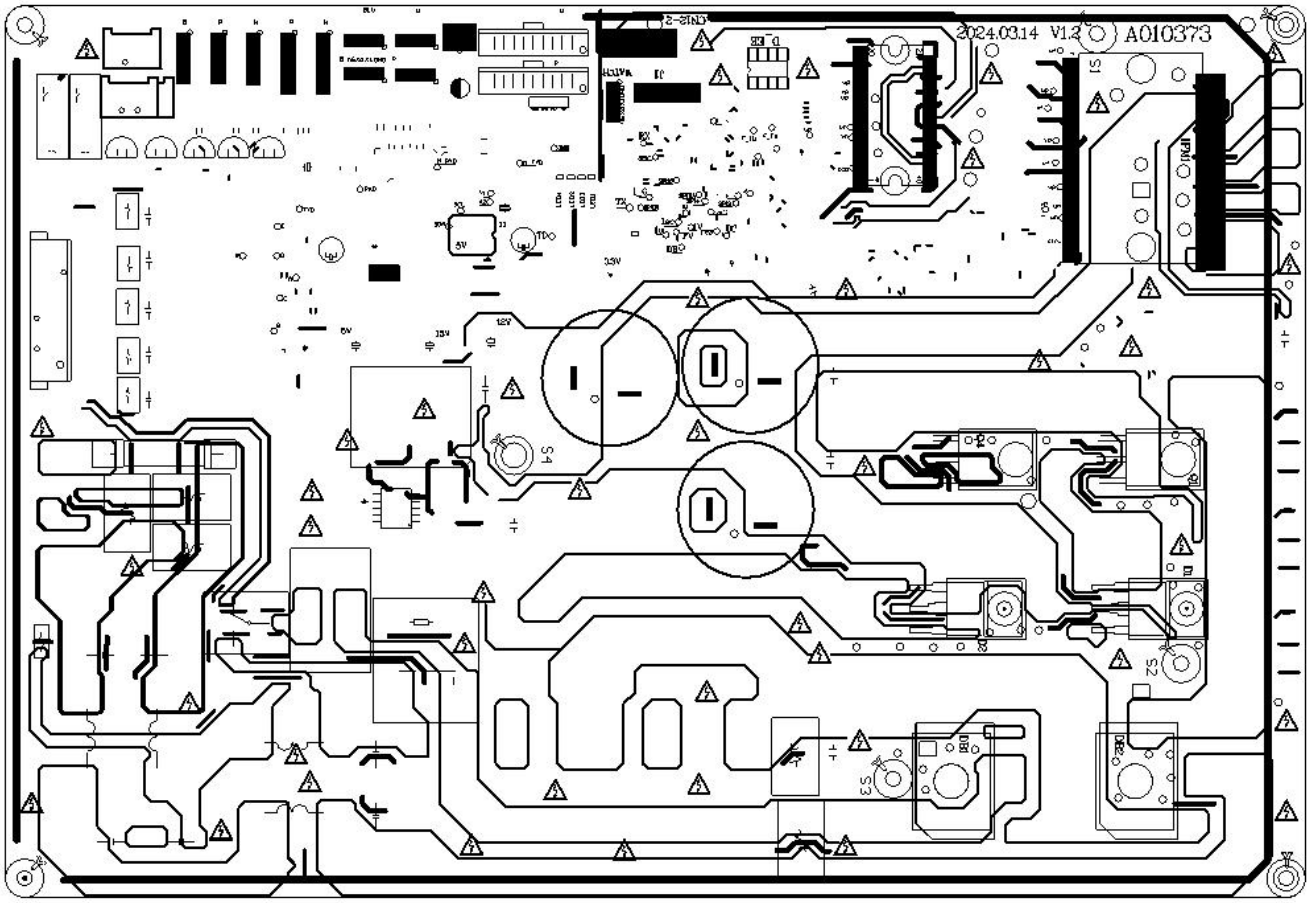

# PCB Printed Diagrams

# 8

## YN060GLSI24M6G

| No. | Name |
|---|---|
| 1 | 4-way Valve |
| 2 | Heater |
| 3 | L, N & Communication |
| 4 | Fuse |
| 5 | PCB Main Relay |

| No. | Name |
|---|---|
| 6 | DC and AC Motor Connector |
| 7 | Electronic Expansion Valve |
| 8 | Discharge Sensor Connector |
| 9 | OAT/OPT Sensor Connector |
| 10 | LED5 |

**Top View**

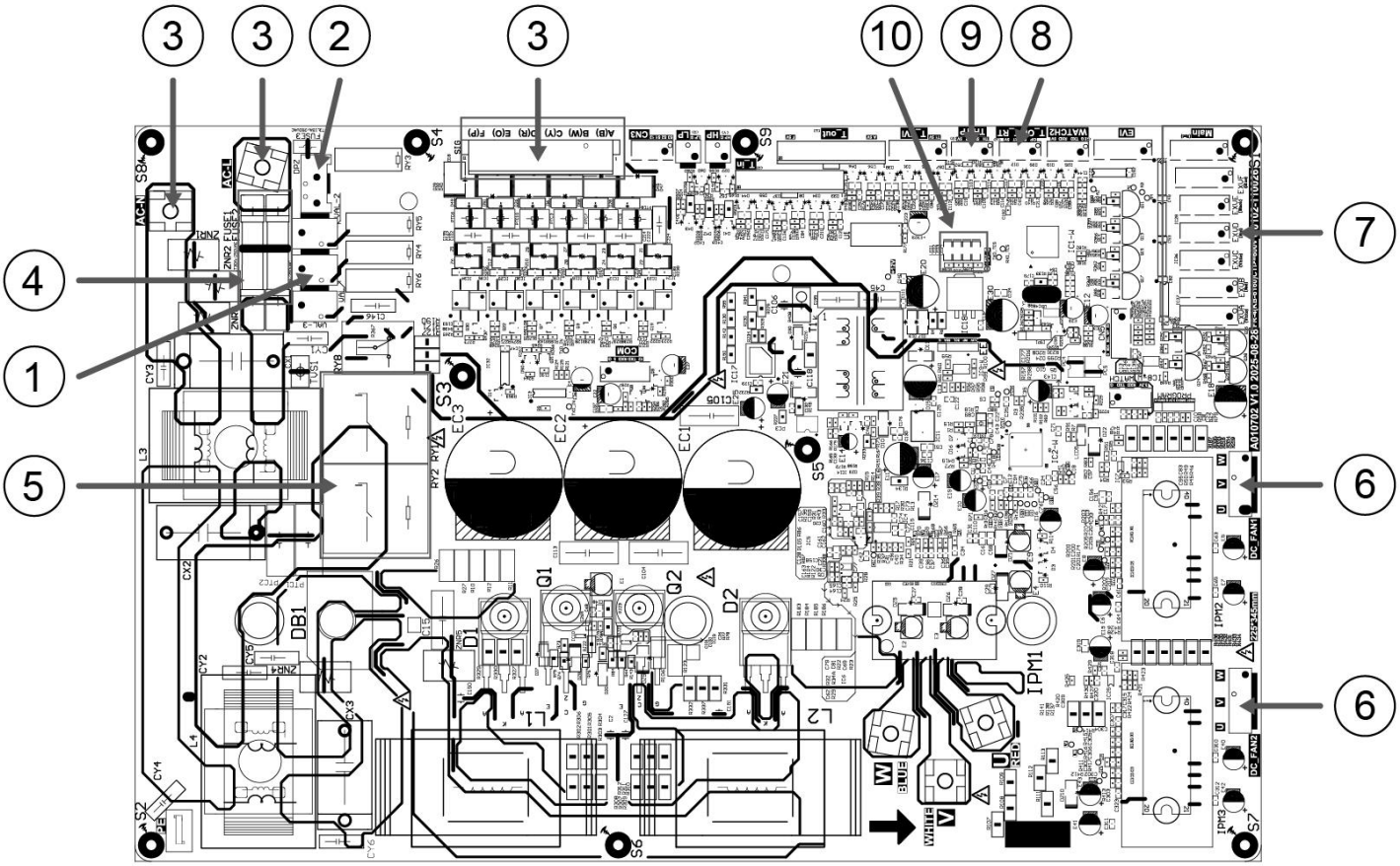

# PCB Printed Diagrams

# 8

## YN060GLSI24M6G

### Bottom View

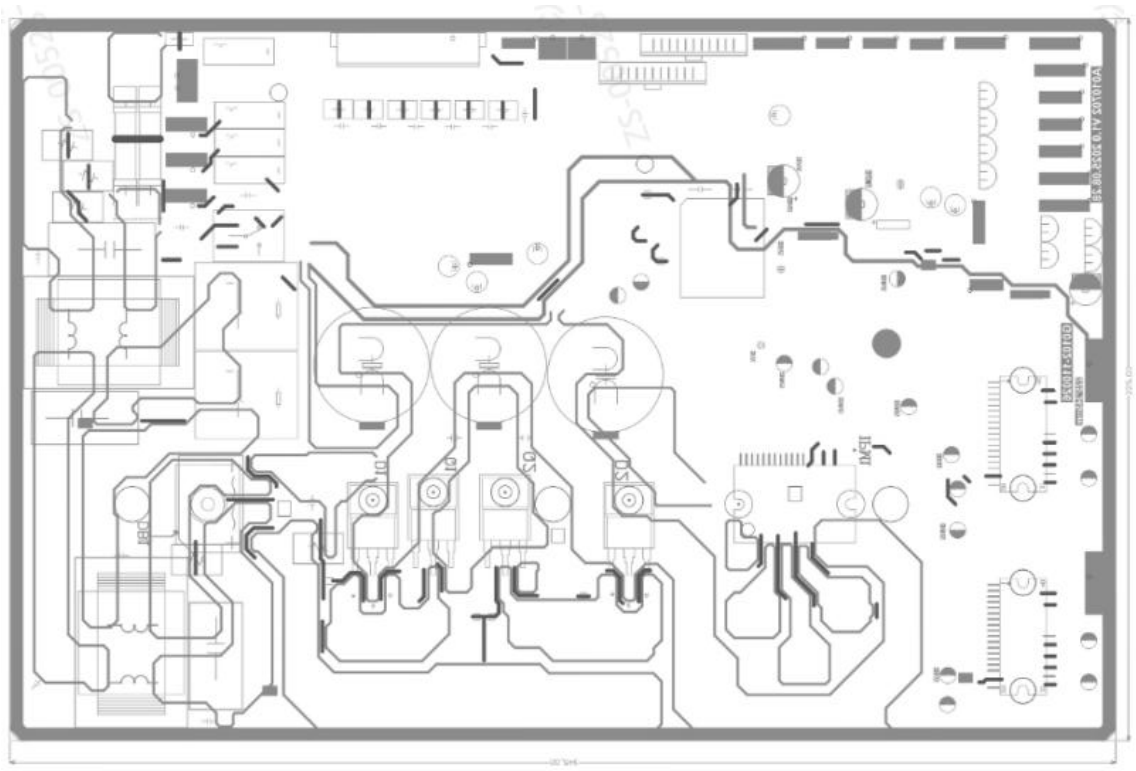

# Appendix A

## Product Disposal Guidelines

This appliance contains refrigerant and other potentially hazardous materials. When disposing the appliance, the law requires special collection and treatment. Do not dispose this product as household waste or unsorted municipal waste.

**Remove all refrigerant and oil prior to disposal as outlined within this manual.**

When disposing of this appliance, the following options are available:

- Dispose of the appliance at a designated municipal electronic waste collection facility.
- When buying a new appliance, the retailer will take back the old appliance free of charge.
- The manufacturer will take back the old appliance free of charge.
- Sell the appliance to certified scrap metal dealers.

**Special Notice**

Disposing of this appliance improperly, or in other natural surroundings, endangers your health and is bad for the environment. Hazardous substances may leak into the ground water and enter the food chain. Follow proper disposal protocols.

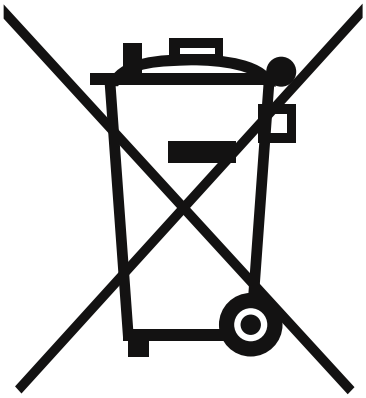

# Appendix A

## If Refrigerant Has Been Added to the System During Installation

(For the Installer) fill in the following:

1) The factory refrigerant charge of the product (located on the outdoor unit nameplate).
2) The additional refrigerant charged into the product.
1+2) The total refrigerant charge.

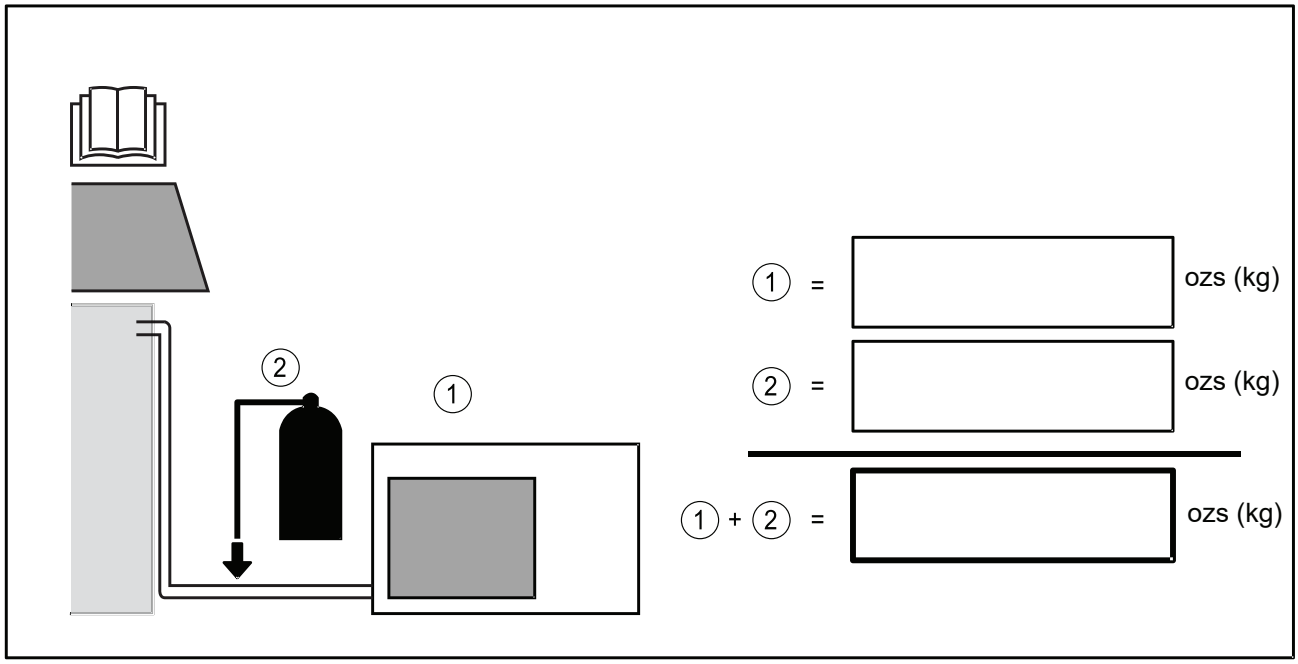


We recommend keeping this information handy for future service and maintenance needs.

# System Notes

The design and specifications of this product are subject to change without prior notice as development continues. Consult with the sales agency or manufacturer for details. Refer to the equipment nameplate for all other applicable specifications.

PIONEER®

is a registered trademark of Parker Davis HVAC International, LLC.

Parker Davis HVAC International
7290 NW 77 Court, Miami, FL 33166 - USA
Tel : (305) 513-4488
Fax : (305) 513-4499
E-mail : info@pdhvac.com
Website: www.pdhvac.com

Pioneer product line, parts, and supplies are available online for convenient ordering at:
www.highseer.com
www.pioneerminisplit.com

Scan the below code to visit our support page where you can find more installation materials:

SCAN ME

Copyright 2025, Parker Davis HVAC International, LLC., All rights reserved.