DUCTLESS MINI SPLIT SYSTEM AIR CONDITIONER / HEAT PUMP

PIONEER®

YNL-24 Multi-Zone Series

For 2/3/4/5/6-Circuit Systems

Quantum Ultra - CT/RT/UT/WT Indoor and YN Outdoor

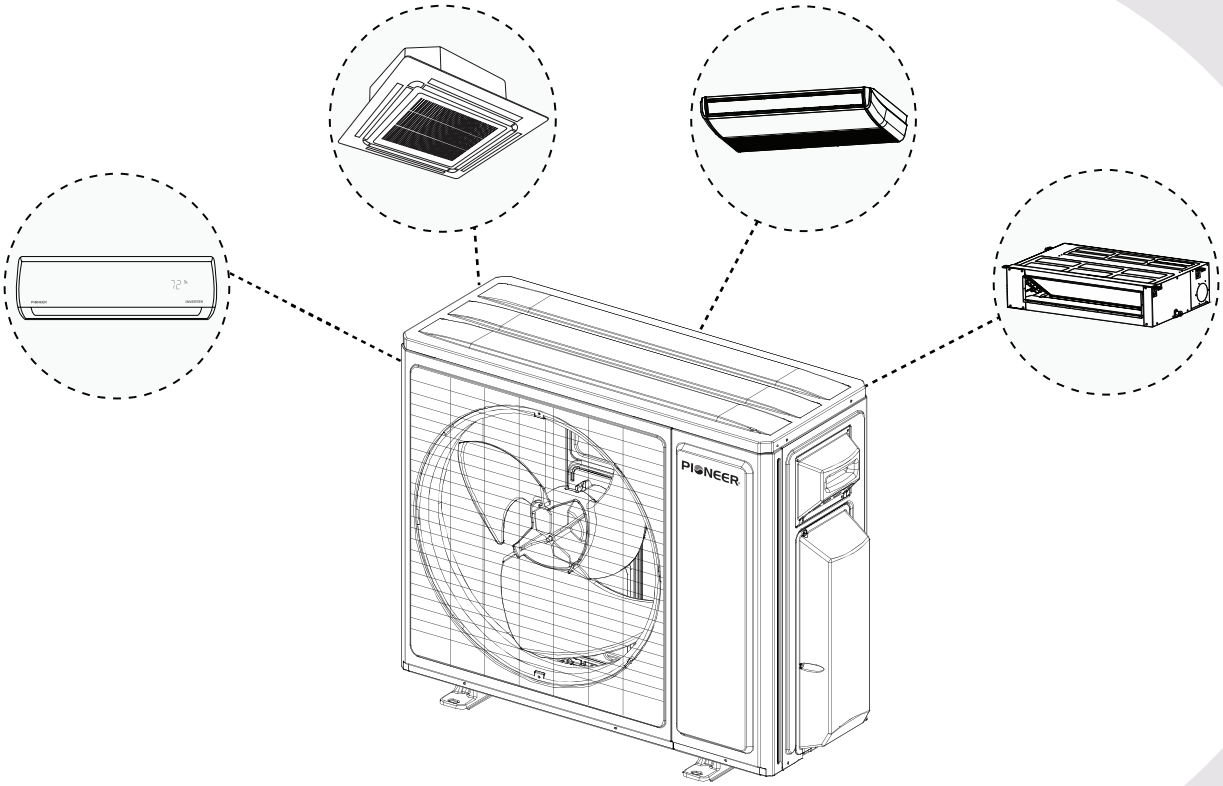

Service Manual

IMPORTANT NOTICE:
Be sure to save this manual for future reference.

CONTENTS

1. Disclaimer 3
2. Safety Information 5
3. A2L Refrigerants 20
4. Product Overview 22
5. Compatibility Information 24
6. Operating Mode Functions 26
7. Protection Functions 32
8. Error Codes 34
9. Troubleshooting 40
10. Control Board Wiring Diagrams 69
11. PCB Printed Diagrams 75
12. Schematic Diagrams 81
13. Temperature Characteristics 83

Disclaimer

1

This service manual is intended for individuals with adequate electrical, electronic, and mechanical experience. Any attempt to repair the appliance may result in personal injury and property damage. The manufacturer or seller is not responsible for the interpretation of this information, nor does it assume any liability in connection with its use.

Information, specifications, and parameters are subject to change without prior notice due to technical modifications or improvements. Actual specifications are provided on the product nameplate label.

The manufacturer shall not be liable for device damage, personal injury, or compliance penalties caused by non-professionals operating without referring to the manual, or by technicians failing to operate in accordance with specifications and local standards of the target region. The contents of this manual are subject to adjustment due to product iteration and updates to local regulations in the target region.

In case of any discrepancy, the product nameplate, exclusive technical notices for the export region, and local compliance requirements shall prevail. Any third-party penalties arising from failure to comply with local electrical, environmental, and safety regulations shall be borne solely by the operator.

Safety Information

2



No flammable sources



Ventilation necessary



Wear protective gear



Do not use electronics near system



Refrigerant Leakage Detector

A handheld leak detector can aid with tracing and isolating refrigerant leaks. It is recommended to have one handy whenever working on the system.

General Warnings

Responsibility & Compliance

- The user is responsible for having the appliance installed by a qualified technician.
- This manual is intended to be used only by professional personnel.
- Follow the instructions given in this manual for handling, installing, cleaning, and maintaining the unit.
- Follow the instructions given in this manual for disposing of the refrigerant.
- Follow the instructions given in this manual for the required installation space dimensions, including the minimum clearance distances from adjacent structures.
- Comply with local and national gas and wiring regulations.
- Comply with local and national electrical codes.
- Repairs must be carried out by an authorized Service Center of the manufacturer. Incorrect repairs could expose the user to risks such as electric shock.

Proper Use

- This appliance is designed for domestic air conditioning use. Do not use it for any other purpose, such as drying clothes or cooling food.
- To prevent dust and waste accumulation, always use the appliance with the air filter mounted. Operating the appliance without the filter may lead to malfunctions.

Safety Information

2

General Warnings (Continued)

Health & Personal Safety

- Prolonged and direct exposure to the air conditioner's cold air could be harmful. Take particular care in rooms occupied by children, elderly individuals, or sick people, and avoid directing the airflow onto plants or animals.
- If the appliance gives off smoke or there is a burning smell, immediately cut off the power supply and contact the Service Center. Prolonged use of the device in such conditions could cause fire or electrocution.
- This appliance can be used by children aged 8 years and older, and by individuals with reduced physical, sensory, or mental capabilities, or lack of experience and knowledge, provided they are supervised or have been given instruction on safe use and understand the associated hazards. Children must not play with the appliance. Cleaning and maintenance must not be performed by children without supervision.
- Avoid touching the appliance while barefoot or when any part of your body is wet or damp.
- Do not put the air conditioner in contact with water. The electrical insulation could be damaged, causing electrocution.
- Do not climb onto or place any heavy or hot objects on top of the appliance.
- Do not insert a stick or similar object into the appliance. This may cause injury.
- Do not leave windows or doors open for long periods when the air conditioner is operating.

Qualification Requirements

Installation & Certification

- The air conditioner must be installed by professional personnel.
- Individuals working on a refrigerant circuit must have a valid and up-to-date certificate from an assessment authority accredited by the industry, recognizing their competence in handling refrigerants. The individual's work on the refrigerant circuit must be in accordance with the assessment specifications.

Service & Supervision

- Service operations must be carried out in accordance with the recommendations of the equipment manufacturer.
- Maintenance and repair operations that require the assistance of other qualified individuals must be conducted under the supervision of a person competent in using flammable refrigerants.
- Only competent individuals shall carry out procedures that affect safety.

Safety Information

2

General Work Area

Site Conditions

- Ensure the area is safe by controlling flammable materials.
- Ensure the location is not near heat sources or a combustible/explosive environment.
- Install, operate, and store the appliance in a room following the minimum room area requirements.
- Do not install the appliance in an environment where the air could contain gas, oil, or sulfur.
- Avoid working in confined spaces.

Work Area Preparation

- All maintenance staff and individuals working in the local area must be informed about the nature of the work being performed.
- Section off the area around the workspace.

Work Procedures

General Precautions

- To minimize the risk of exposure to flammable gas or vapor, conduct work using controlled procedures.
- Appropriate anti-static measures, such as wearing anti-static clothing and gloves, are necessary when installing the appliance.
- Be sure to wear a safety helmet, gloves, and a safety belt when working in a high place (more than 6.5 feet / 2 m). Insufficient safety measures may cause a fall.

Tools & Parts

- The use of inappropriate parts or tools may cause an electrical shock, excessive heat generation, or fire.

Handling the Appliance

- Do not pierce or burn the appliance.
- When filling the combustible refrigerant, improper operations may cause injury to individuals or damage to property.

Safety Information

2

Work Procedures (Continued)

Verification

- Complete a leak test after the installation is finished.

Electrical Safety

Pre-Work Safety Checks

Repairing and maintaining electrical components must include initial safety checks and component inspections. Initial safety checks must include the following:

- Confirm the capacitors are completely discharged before conducting repair work, doing so in a safe manner to avoid sparking. The step-up capacitor supplies high-voltage electricity to the electrical components of the outdoor unit, and a charged capacitor may cause an electrical shock.
- Ensure that no live electrical components and wiring are exposed while charging, recovering, or purging the system.
- If it is necessary to supply power to the equipment to conduct the repair or inspect the circuits, do not touch any electrically charged sections of the equipment.
- Do not repair electrical components with wet hands. Doing so may cause an electrical shock.
- Confirm there is continuity of ground bonding.

Qualified Work & Compliance

- All electric work must be performed by a licensed technician in accordance with local regulations and the instructions provided in this manual.

Disconnecting Power

- Disconnect the appliance from the main electricity supply before carrying out any cleaning or maintenance. Before accessing the terminals specifically, ensure all power circuits are disconnected from the power supply.
- Ensure that the appliance is disconnected from the power supply when it will remain inoperative for a long period. The appliance should also be disconnected when carrying out cleaning or maintenance.
- The appliance must be fitted with a means for disconnection from the main power supply, featuring contact separation in all poles to provide full disconnection under "Over Voltage Category III" conditions. These means must be incorporated in the fixed wiring in accordance with the wiring rules.

Safety Information

2

Electrical Safety (Continued)

Electrical Components & Specifications

- When changing electrical components, they must be fit-for-purpose and meet the correct specifications.
- Ensure that the main voltage corresponds to the value stamped on the rating plate.
- Replace the fuse with a new one of the same specification if it is blown. Do not replace it with copper or other conducting wire.

Wiring & Terminals

- Make sure each wiring terminal is connected firmly during installation and maintenance.
- Be sure to use the specified wiring between the indoor and outdoor units. Make the connections securely and route the cable properly so that there is no force pulling the cable at the connection terminals. Improper connections may cause excessive heat generation or fire.
- When wiring between the indoor and outdoor units, make sure that the terminal cover does not lift off or dismount because of the cable. If the cover is not mounted properly, the terminal connection section may cause an electrical shock, excessive heat generation, or fire.
- If the power cable and lead wires are scratched or have deteriorated, be sure to replace them. Damaged cables or wires may cause an electrical shock, excessive heat generation, or fire.
- Apply protective accessories such as protective boards, cable-cross loops, and wire clips.

Power Cord & Plug

- Confirm the power socket is suitable for the plug. Keep the switch or power plug clean.
- Correctly insert the power plug into the socket to avoid electric shock or fire caused by insufficient contact.
- If the power cord or connection wire is not long enough, obtain a properly sized power cord or connection wire from the manufacturer or distributor. Do not extend the wire yourself.
- Do not pull out the plug to switch off the appliance when it's in operation, because this could create a spark, causing a fire.
- Do not bend, tug, or compress the power cord because this could cause damage. A damaged power cord can cause electrical shocks or fire. Only specialized technical personnel can replace a damaged power cord.

Safety Information

2

Electrical Safety (Continued)

Circuit Requirements

- The air conditioner must use a dedicated circuit. Do not share the same circuit with other appliances.
- Do not use a joined power cable or extension cable, or share the same power outlet with other electrical appliances, since it may cause an electrical shock, excessive heat generation, or fire.
- For air conditioners without plugs, a disconnect switch must be installed in the circuit. The switch must provide all-pole disconnection, and the contact separation distance must be more than 0.1 inch (3 mm).
- Depending on the conditions of the installation site, installation of a leakage breaker may be necessary to prevent electrical shocks.
- If the unit is being installed in a humid place, a circuit breaker must be installed.

Grounding

- Have the unit adequately grounded. The grounding wire must not be used for any other purpose.
- Be sure to provide grounding when repairing the equipment in a humid or wet place to avoid electrical shocks.
- The live, neutral, and grounding wires of the power supply must correspond to the live, neutral, and grounding wires of the air conditioner.

Fault Handling

- If a fault exists that could compromise safety, the electrical supply must not be connected to the circuit until the fault is resolved. If the fault cannot be immediately corrected but it is necessary to continue operation, a temporary solution must be implemented. If a temporary solution is implemented, it must be reported to the owner of the equipment, ensuring both parties are informed.

Cabling

- Ensure the cabling is protected from wear, corrosion, excessive pressure, vibrations, sharp edges, or any other adverse environmental effects.
- When checking the cable, take into account the effects of aging or continual vibrations from sources such as compressors or fans.

Safety Information

2

Well-Ventilated Area

- Ensure the area is open and well-ventilated before accessing the system or performing any work that generates heat.
- Ventilation must be maintained throughout the work.
- Confirm that all ventilation openings remain unobstructed.
- Conduct welding work in a well-ventilated location. Using a welder in an enclosed room may cause oxygen deficiency.

No Ignition Sources

Prohibited Sources & Activities

- Individuals carrying out work involving exposed pipework on a refrigerant system are prohibited from using any sources of ignition that may lead to a risk of fire or explosion.
- All possible ignition sources, including smoking, must be kept at a sufficient distance from the installation or maintenance site.
- When using refrigerant R454B during installation or maintenance, the location must be free of open flames, welding activity, drying ovens, or any other heat source exceeding 548°F (286.7°C).
- Do not use ignition sources when conducting any work that exposes refrigeration system piping.

Site Verification & Signage

- Before conducting work on the equipment, the surrounding area must be surveyed to ensure there are no flammable hazards or ignition risks.
- No Smoking signs must be displayed.

Safety Information

2

Refrigerant & Refrigerant Piping

Leak Detection

- Check the area with an appropriate refrigerant detector before and during work to identify potentially flammable atmospheres, including when moving the air conditioner or inspecting a secondary circuit in indirect refrigerant systems.
- Ensure leak detection equipment is suitable for flammable refrigerants (non-sparking, adequately sealed, or intrinsically safe).
- Never use potential ignition sources for refrigerant leak detection.
- Remember that refrigerants may be odorless, so visual/instrument checks are essential.

Ventilation & Environmental Safety

- Ensure ventilation safely disperses any released refrigerant into the outside atmosphere.
- Never vent refrigerant into the atmosphere — this is illegal under federal and local regulations. Always read and follow applicable local EPA laws.

Installation Requirements

- Ensure the refrigerant charge size complies with minimum room size requirements.
- Keep the refrigerant piping as short as possible.
- Protect the refrigerant piping from physical damage.
- Install piping and components away from corrosive substances; if unavoidable, use corrosion-resistant materials or adequate corrosion protection.
- Ensure the installation complies with all applicable national refrigerant regulations.
- Follow this manual's instructions for handling, installation, cleaning, maintenance, and disposal of refrigerant.

Leak Response / Emergency Procedures

- If refrigerant gas is discharged during repair work, do not touch it — it may cause frostbite.
- If the indoor unit leaks refrigerant during installation, immediately shut off the outdoor unit valve.
- Evacuate all personnel from the area for at least 15 minutes until the refrigerant fully dissipates.

Safety Information

2

Refrigerant & Refrigerant Piping (Continued)

Repair & Disposal

- If the product is damaged, transport it to a maintenance station.
- On-site welding or refrigerant pipe repairs are strictly prohibited.

Leak Detection Methods

Acceptable Detection Methods

Electronic leak detectors and leak detection fluids are acceptable methods of leak detection.

Electronic Leak Detector: Use to detect flammable refrigerants.

- Ensure the leak detector's sensitivity is properly calibrated.
- Calibrate the detection equipment in a refrigerant-free area.
- Confirm the gas percentage does not exceed 25%.
- Confirm the detection equipment is not a potential ignition source and is suitable for the refrigerant being used.
- Set the leak detection equipment to a percentage of the refrigerant's Lower Flammability Limit (LFL).
- Calibrate the detection equipment to the refrigerant being used.

Leak Detection Fluids: Suitable for use with most refrigerants.

- Avoid using detergents containing chlorine, as the chlorine may react with the refrigerant and corrode the copper pipework.

If a Leak Is Found

- If the refrigerant gas leaks, be sure to locate the leaking point and repair it before charging the refrigerant. After charging the refrigerant, make sure that there is no leak.
- If a leak is suspected, extinguish all naked flames.
- If refrigerant gas leaks during repair work, ventilate the area. Refrigerant gas may generate toxic gases when it comes into contact with flames.
- If the leaking point cannot be located and the repair work must be stopped, be sure to pump down and close the service valve to prevent refrigerant gas from leaking into the room.

Safety Information

2

Leak Detection Methods (Continued)

If a Leak Is Found (Continued)

- If a refrigerant leak is found that requires brazing, recover all the refrigerant from the system or isolate it in a part of the system remote from the leak.
- Purge oxygen-free nitrogen (OFN) through the system before and during the brazing process.

Removal & Evacuation

Removal & Evacuation Procedure

1. Recover the refrigerant charge into the proper recovery cylinders.
2. Purge the circuit with inert gas.
3. Evacuate the refrigerant.
4. Purge the circuit again with inert gas.
5. Open the circuit by cutting or brazing.
6. Repeat this process until no refrigerant remains in the system.

Flushing Procedure

1. Break the vacuum in the system with OFN.
2. Continue filling until the working pressure is reached.
3. Vent the system to the atmosphere.
4. Pull the system down to a vacuum.

Precautions

- Do not use compressed air or oxygen for this task.
- Ensure that the outlet for the vacuum pump is well-ventilated and not close to any ignition sources.
- When disconnecting the suction or discharge pipe of the compressor at the welded section, evacuate the refrigerant gas completely at a well-ventilated location first. If there is gas remaining inside the compressor, the refrigerant gas or refrigerating machine oil may discharge when the pipe is disconnected, and it may cause injury.

Safety Information

2

Decommissioning

Before Beginning

Ensure the following:

- The technician is completely familiar with the equipment and its details.
- The recovery process is supervised throughout the procedure by a competent person.
- An oil and refrigerant sample is taken in case analysis is required for reusing reclaimed refrigerant.
- The system is electrically isolated.
- Electrical power is available when completing this procedure.
- Recovery equipment and cylinders conform to the appropriate standards.
- Mechanical handling equipment is available for moving refrigerant cylinders.
- All personal protective equipment (PPE) is available.

Recovery Process

- Pump down the refrigerant system, if possible.
- If vacuuming the system is not possible, make a manifold so that the refrigerant can be removed from various parts of the system.
- Ensure the cylinder is situated on the scales before the recovery procedure begins.
- Start the recovery machine and operate it in accordance with the manufacturer's instructions.
- Do not overfill the cylinders (maximum 80% liquid charge by volume).
- Do not exceed the maximum working pressure of the cylinder, even temporarily.

After Recovery

- After the cylinders are filled correctly and the process is completed, promptly remove the cylinders and equipment from the site.
- Confirm the isolation valves on the equipment are closed off.
- Do not charge the recovered refrigerant into another refrigeration system unless the refrigerant has been cleaned and checked.

Safety Information

2

Refrigerant Recovery

General Principle

- When servicing or decommissioning the system, remove the refrigerant safely.

Cylinder & Equipment Requirements

- When transferring refrigerant, use appropriate recovery cylinders. The cylinders must include pressure-relief and shut-off valves.
- Ensure that the correct number of cylinders for holding the total system charge is available.
- Designate and label each cylinder for the specific refrigerant being recovered, using cylinders specifically designed for refrigerant recovery.
- Empty recovery cylinders must be evacuated and cooled before recovering the refrigerant.
- A set of calibrated weighing scales must be available.
- Hoses must be complete with leak-free disconnect couplings.
- Confirm the recovery equipment is functioning properly and has been maintained correctly. A set of instructions for its use must be readily available.
- The recovery equipment must be capable of recovering flammable refrigerants.
- Confirm that any associated electrical components are sealed to prevent ignition in the event of a refrigerant release.

During Recovery

- Do not mix refrigerants in the recovery unit or cylinders.

After Recovery

- Return the recovered refrigerant to the refrigerant supplier in the correct recovery cylinder, along with the relevant waste transfer note.

Compressor & Oil Handling

- Before removing the compressors or compressor oils, evacuate them to an acceptable level, ensuring the flammable refrigerant does not remain within the lubricant.
- Complete the evacuation process before returning the compressors to the suppliers.
- Use only electric heating to the compressor body to accelerate the evacuation process.
- Safely drain the oil from the system.

Safety Information

2

Labeling

- Label the equipment stating that it has been decommissioned and emptied of refrigerant.
- Ensure the label is dated and signed by the responsible technician.
- Confirm the labels on the equipment state that the equipment contains flammable refrigerant.
- Confirm that all equipment markings remain visible and legible. Replace or correct any illegible markings or signs.

Fire Extinguisher

- If you need to conduct hot work on the refrigeration equipment or any associated parts, appropriate fire extinguishing equipment must be available.
- Keep a dry powder or CO_2 fire extinguisher adjacent to the charging area.

Defrosting

- Do not use any means to accelerate the defrosting process or clean the frost. Follow the manufacturer's guidelines.

Storage

- Store the appliance in a well-ventilated area where the room size meets the minimum area specified for operation.
- Store the appliance in a room free of continuously operating open flames (e.g., a gas appliance) and ignition sources (e.g., an electric heater).
- Store the appliance properly to prevent mechanical damage.

Relocation

- When relocating the equipment, make sure that the new installation site has sufficient strength to withstand the equipment's weight. If the site does not have sufficient strength or the installation work is not conducted securely, the equipment may fall and cause injury.
- Do not tilt the unit when relocating it. The water inside the unit may spill and wet the furniture and floor.

Safety Information

2

Disposal

- The packaging materials are recyclable and should be disposed of in separate waste bins.
- When the air conditioner reaches the end of its useful life, bring it to a special waste collection center for disposal.
- The batteries in the remote controller must be recycled or disposed of properly. Regarding the disposal of used batteries, discard them as sorted municipal waste at an accessible collection point. If a child swallows the coin battery, see a doctor immediately.

Repairs to Sealed Components

Before Starting Work

- During repairs to sealed components, disconnect all electrical supplies from the equipment being worked on prior to removing sealed covers.
- If it is necessary to maintain an electrical supply to the equipment during service, use a permanently operating form of leak detection, located at the most critical point.
- Intrinsically safe components do not have to be isolated prior to working on them.

Casing & Seal Integrity

- When working on electrical components, ensure the casing is not altered in a way that will affect the level of protection. This includes damage to cables, an excessive number of connections, terminals not meeting the original specifications, damage to seals, and incorrect fitting of glands.
- Ensure that the seals or sealing materials have not degraded to the point where they no longer prevent the ingress of flammable atmospheres.
- Using silicone sealant may inhibit the effectiveness of certain types of leak detection equipment.

Replacement Parts

- Replacement parts must be in accordance with the manufacturer's specifications.

Safety Information

2

Repairs to Intrinsically Safe Components

- Intrinsically safe components are the only types of components that can be worked on while in the presence of a flammable atmosphere.
- Do not apply permanent inductive or capacitive loads to the circuit unless they are within the equipment's permissible voltage and current limits.
- The test apparatus must have the correct rating.
- Replace components only with parts specified by the manufacturer.
- Other parts may cause leaked refrigerant to ignite in the atmosphere.

Maintenance & Service

- Do not clean the air conditioner with water. Doing so may cause an electrical shock.
- Be sure to measure insulation resistance after the repair, and make sure that the resistance is 1 MΩ or higher. Faulty insulation may cause an electrical shock.
- Be sure to check the drainage of the indoor unit after the repair. Faulty drainage may cause water to enter the room and wet the furniture and floor.
- If maintenance and repairs require assistance from additional personnel, the tasks must be conducted under the supervision of a certified professional competent in handling flammable refrigerants.
- Ensure all mechanical connections remain accessible for maintenance.
- Ensure the servicing is performed only in accordance with the manufacturer's recommendations.
- If the installation platform or frame has corroded, replace it. A corroded installation platform or frame may cause the unit to fall, resulting in injury.

Safety Information

2

Usage Statement

- Protect the pipework from physical damage. For flammable refrigerants, do not install pipes in an unventilated space if it is smaller than the minimum requirements in Annex GG. For A2L refrigerants, you must install pipes that comply with 22.116. If field charging is necessary, technicians must quantify the impact of different pipe lengths on the refrigerant charge.

- Ensure that mechanical connections made in accordance with 22.118 remain accessible for maintenance.

- Protect all pipework — including piping materials, routing, and installation — from physical damage during operation and servicing. It must comply with all national and local codes and standards, including:
    - ASHRAE 15
    - ASHRAE 15.2
    - IAPMO Uniform Mechanical Code
    - ICC International Mechanical Code
    - CSA B52
    - All field joints must be accessible for inspection before being covered or enclosed.

- Qualified personnel must carry out maintenance, service, and repair operations according to Annex HH.

A2L Refrigerants

3

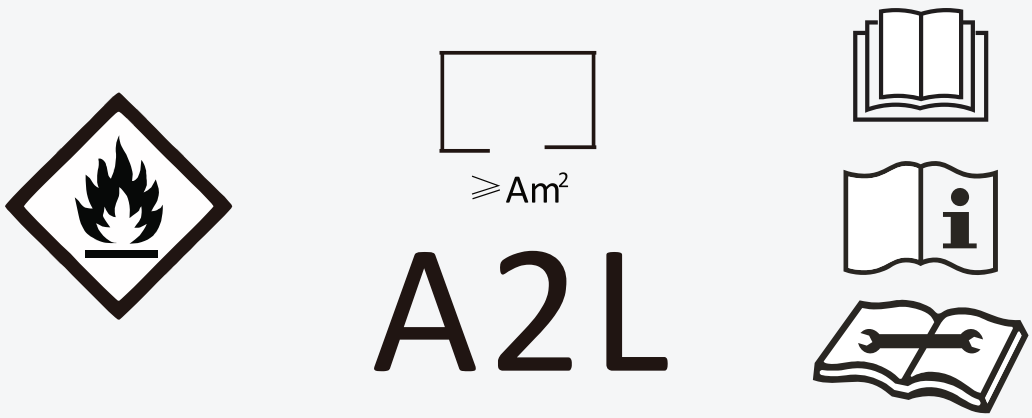

In UL/CSA 60335-2-40, R454B refrigerant is classified as A2L, indicating that it is mildly flammable. As a result, R454B is suitable for systems requiring additional refrigerant charge, provided the area of the rooms served by the system is limited accordingly. The total amount of refrigerant in the system must be less than or equal to the allowable maximum refrigerant charge, which depends on the area of the rooms served by the system.

Definitions

- M_C: The actual refrigerant charge in the system.
- A: The actual room area where the appliance is installed.
- A_{min}: The required minimum room area.
- M_{max}: The allowable maximum refrigerant charge in a room.
- Q_{min}: The minimum circulation airflow.
- Anv_{min}: The minimum opening area for connecting rooms.

Maximum Charge & Required Minimum Floor Area

m = ($6m^3$) x LFL, m = ($52\ m^3$) x LFL, m = (260^3) x LFL

Where LFL is the lower flammable limit in kg/m^3, R-454B LFL is 0.303 kg $/m^3$

For appliances with a charge amount m1 < M = m2

The maximum charge in a room must be in accordance with the following: $M_{max} = 2.5 \times (LFL)^{(5/4)} \times h_0 \times (A)^{1/2}$, do not exceed $M_{max} = SF \times LFL \times h_0 \times A$.

The required minimum floor area (A_{min}) to install an appliance with refrigerant charge M(kg) must be in accordance with the following: $A_{min} = (M / (2.5 \times (LFL)^{(5/4)} \times h_0))^2$, not less than $A_{min} = M / (SF \times LFL \times h_0)$

A2L Refrigerants

3

Table 1 - Maximum Charge

h_0(m)	Floor Area	Charge Limit
(Installed Height)	43 ft² (4 m²)	38.5 oz (1.09 kg)
	75 ft² (7 m²)	67.3 oz (1.91 kg)
1.8 (6'0")	107 ft² (10 m²)	96.2 oz (2.73 kg)
	161 ft² (15 m²)	138.2 oz (3.92 kg)
	215 ft² (20 m²)	159.6 oz (4.52 kg)
	322 ft² (30 m²)	195.5 oz (5.54 kg)
	538 ft² (50 m²)	252.3 oz (7.15 kg)
2.5 (8'2")	43 ft² (4 m²)	53.44 oz (1.52 kg)
	75 ft² (7 m²)	93.5 oz (2.65 kg)
	107 ft² (10 m²)	133.6 oz (3.79 kg)
	161 ft² (15 m²)	191.9 oz (5.44 kg)
	215 ft² (20 m²)	221.6 oz (6.28 kg)
	322 ft² (30 m²)	271.4 oz (7.7 kg)
	538 ft² (50 m²)	350.4 oz (9.94 kg)
2.8 (9'2")	43 ft² (4 m²)	59.8 oz (1.7 kg)
	75 ft² (7 m²)	104.7 oz (2.97 kg)
	107 ft² (10 m²)	149.6 oz (4.24 kg)
	161 ft² (15 m²)	215 oz (6.09 kg)
	215 ft² (20 m²)	248.2 oz (7.04 kg)
	322 ft² (30 m²)	304 oz (8.62 kg)
	538 ft² (50 m²)	392.5 oz (11.12 kg)

Table 2 - Minimum Room Area

Refrigerant = R-454B, LFL = 0.303 kg/m^3

h_0(m)	Charge Limit	Min. Room Area
(Installed Height)	28.2 oz (0.8 kg)	32.0 ft² (2.93 m²)
	33.5 oz (0.95 kg)	38.0 ft² (3.48 m²)
1.8 (6'0")	42.3 oz (1.2 kg)	48.0 ft² (4.4 m²)
	60.0 oz (1.7 kg)	68.0 ft² (6.23 m²)
	77.6 oz (2.2 kg)	88.0 ft² (8.07 m²)
	98.8 oz (2.8 kg)	111.0 ft² (10.27 m²)
	119.9 oz (3.4 kg)	135.0 ft² (12.47 m²)
2.5 (8'2")	28.2 oz (0.8 kg)	23.0 ft² (2.11 m²)
	33.5 oz (0.95 kg)	27.0 ft² (2.51 m²)
	42.3 oz (1.2 kg)	35.0 ft² (3.17 m²)
	60.0 oz (1.7 kg)	49.0 ft² (4.49 m²)
	77.6 oz (2.2 kg)	63.0 ft² (5.81 m²)
	98.8 oz (2.8 kg)	80.0 ft² (7.39 m²)
	119.9 oz (3.4 kg)	97.0 ft² (8.98 m²)
2.8 (9'2")	28.2 oz (0.8 kg)	21.0 ft² (1.89 m²)
	33.5 oz (0.95 kg)	25.0 ft² (2.24 m²)
	42.3 oz (1.2 kg)	31.0 ft² (2.83 m²)
	60.0 oz (1.7 kg)	44.0 ft² (4.01 m²)
	77.6 oz (2.2 kg)	56.0 ft² (5.19 m²)
	98.8 oz (2.8 kg)	72.0 ft² (6.6 m²)
	119.9 oz (3.4 kg)	87.0 ft² (8.02 m²)

Table 3 - Minimum Room Area

The calculated minimum allowable room area for all capacities is as follows:

Model (BTU)	Minimum Allowable Room Area (Assumes 25 ft. lineset and 6 ft. install height)
YN020GLSI24M2G	68 ft² (6.33 m²)
YN030GLSI24M3G	88 ft² (8.07 m²)
YN040GLSI24M4G	111 ft² (10.27 m²)
YN050GLSI24M5G	135 ft² (12.47 m²)
YN060GLSI24M6G	190 ft² (17.68 m²)

Table 4 - Maximum Charge

The standard factory refrigerant charge amount as well as the maximum allowable charge are as follows:

Model (BTU)	R-454B Refrigerant (Standard Charge)	R-454B Refrigerant (Maximum Charge)
2-Zone	3.75 lbs / 1,700 g	4.29 lbs / 1,950 g
3-Zone	4.85 lbs / 2,200 g	5.67 lbs / 2,575 g
4-Zone	6.17 lbs / 2,800 g	7.27 lbs / 3,300 g
5-Zone	7.5 lbs / 3,400 g	8.65 lbs / 3,925 g
6-Zone	9.25 lbs / 4,200 g	10.9 lbs / 4,950 g

Product Overview

4

Model Numbers

Note

Serial numbers are typically located behind the electronic control box cover cap of each unit.

Circuit	Model Number
2	YN020GLSI24M2G
3	YN030GLSI24M3G
4	YN040GLSI24M4G
5	YN050GLSI24M5G
6	YN060GLSI24M6G

Product Overview

4

Dimensions & Weight

YN020GLSI24M2G, YN030GLSI24M3G
YN040GLSI24M4G, YN050GLSI24M5G

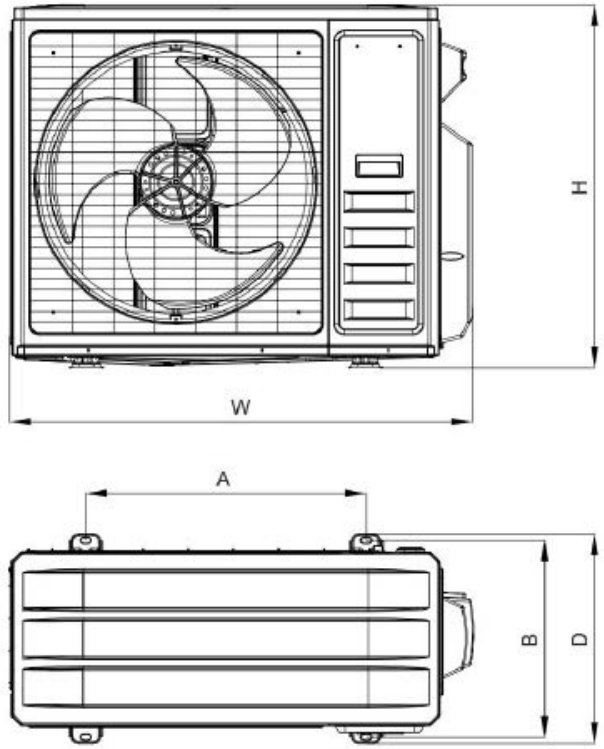

YN060GLSI24M6G

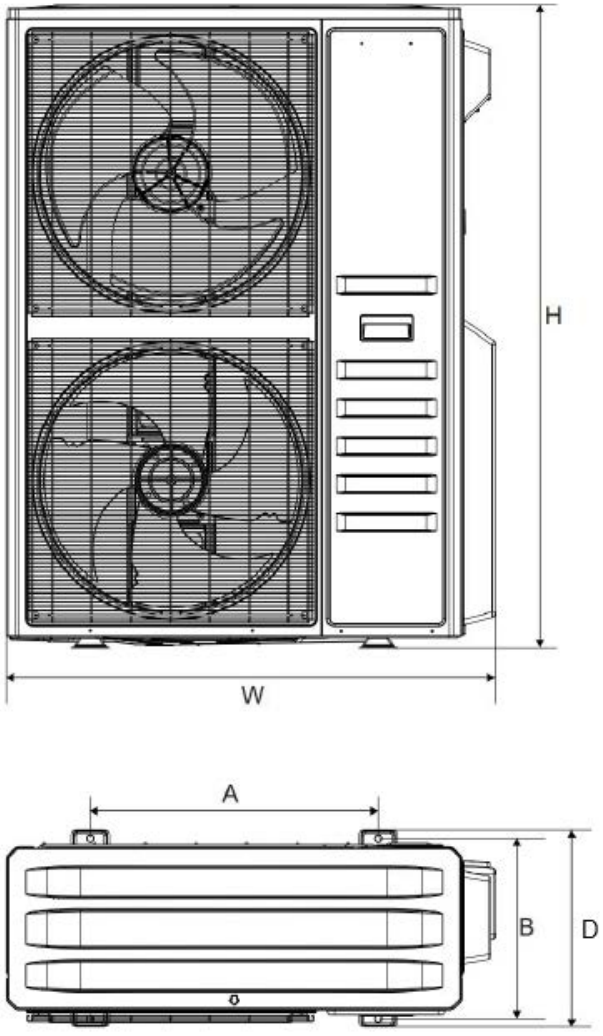

Model Number	Dimensions				
	W	D	H	A	B
YN020GLSI24M2G	36-1/2 in	15 in	27-1/2 in	23-1/8 in	13-3/4 in
	927 mm	380 mm	699 mm	586 mm	348 mm
YN030GLSI24M3G	38-1/2 in	16-5/8 in	31-5/8 in	23-7/8 in	15-3/8 in
	978 mm	421 mm	803 mm	607 mm	390 mm
YN040GLSI24M4G	42-1/4 in	18-3/8 in	33-5/8 in	26 in	18-1/4 in
	1,074 mm	468 mm	853 mm	660 mm	462 mm
YN050GLSI24M5G	42-1/4 in	18-3/8 in	33-5/8 in	26 in	18-1/4 in
	1,074 mm	468 mm	853 mm	660 mm	462 mm
YN060GLSI24M6G	40-1/8 in	16-1/8 in	52-5/8 in	23-5/8 in	14-3/4 in
	1,020 mm	409 mm	1,338 mm	600 mm	375 mm

Model Number	Net Unit Weight
YN020GLSI24M2G	92.6 lbs
	42 kgs
YN030GLSI24M3G	119.0 lbs
	54 kgs
YN040GLSI24M4G	145.5 lbs
	66 kgs
YN050GLSI24M5G	174.2 lbs
	79 kgs
YN060GLSI24M6G	249.1 lbs
	113 kgs

Compatibility Information

5

Allowable Zone Combinations for Multi-Circuit Systems

Outdoor Unit Model Number	YN020GLSI24M2G	YN030GLSI24M3G	YN040GLSI24M4G	YN050GLSI24M5G	YN060GLSI24M6G
Number of Available Zones	**Two (2)**	**Three (3)**	**Four (4)**	**Five (5)**	**Six (6)**
Two Zones Utilized (Allowable Combinations in kBTU)	9 + 9 12 + 9 12 + 12 18 + 9	9 + 9 18 + 9 12 + 12 24 + 12 12 + 9 24 + 9 18 + 12 18 + 18	9 + 9 18 + 9 12 + 12 24 + 12 24 + 18 12 + 9 24 + 9 18 + 12 18 + 18 24 + 24	9 + 9 18 + 9 12 + 12 24 + 12 24 + 18 12 + 9 24 + 9 18 + 12 18 + 18 24 + 24	9 + 18 9 + 24 9 + 36 12 + 12 12 + 18 12 + 24 12 + 36 18 + 18 18 + 24 18 + 36 24 + 24 24 + 36
Three Zones Utilized (Allowable Combinations in kBTU)		9 + 9 + 9 12 + 9 + 9 18 + 9 + 9 12 + 12 + 9 18 + 12 + 9 12 + 12 + 12	9 + 9 + 9 9 + 9 + 18 9 + 12 + 18 12 + 12 + 12 12 + 12 + 24 9 + 9 + 12 9 + 12 + 12 9 + 12 + 24 12 + 12 + 18 12 + 18 + 18	9 + 9 + 9 18 + 9 + 9 18 + 12 + 9 18 + 18 + 9 24 + 24 + 9 18 + 12 + 12 18 + 18 + 12 24 + 24 + 12 24 + 18 + 18 12 + 9 + 9 12 + 12 + 9 24 + 12 + 9 24 + 18 + 9 12 + 12 + 12 24 + 12 + 12 24 + 18 + 12 18 + 18 + 18	9+9+12 9+9+18 9+9+24 9+9+36 9+12+12 9+12+18 9+12+24 9+12+36 9+18+18 9+18+24 9+18+36 9+24+24 9+24+36 12+12+12 12+12+18 12+12+24 12+12+36 12+18+18 12+18+24 18+18+18
Four Zones Utilized (Allowable Combinations in kBTU)			9 + 9 + 9 + 9 12 + 9 + 9 + 9 12 + 12 + 9 + 9 12 + 12 + 12 +9 12 + 12 + 12 + 12 18 + 9 + 9 + 9 18 + 12 + 9 + 9	9 + 9 + 9 + 9 12 + 9 + 9 + 9 18 + 9 + 9 + 9 12 + 12 + 9 + 9 18 + 12 + 9 + 9 12 + 12 + 12 + 9 18 + 12 + 12 + 9 24 + 12 + 12 + 9 24 + 18 + 12 + 9 12 + 12 + 12 + 12 18 + 12 + 12 + 12 24 + 12 + 12 + 12 18 + 18 + 12 + 12	9+9+9+9 9+9+9+12 9+9+9+18 9+9+9+24 9+9+12+12 9+9+12+18 9+9+12+24 9+9+18+18 9+9+18+24 9+12+12+12 9+12+12+18 9+12+12+24 9+12+18+18 9+12+18+24 9+18+18+18 9+18+18+24 12+12+12+12 12+12+12+18 12+12+12+24 12+12+18+18 12+12+18+24
Five Zones Utilized (Allowable Combinations in kBTU)				9 + 9 + 9 + 9 + 9 12 + 9 + 9 + 9 + 9 18 + 9 + 9 + 9 + 9 24 + 9 + 9 + 9 + 9 12 + 12 + 9 + 9 + 9 18 + 12 + 9 + 9 + 9 24 + 12 + 9 + 9 + 9 18 + 18 + 9 + 9 + 9 12 + 12 + 12 + 9 + 9 18 + 12 + 12 + 9 + 9 12 + 12 + 12 + 12 + 9 18 + 12 + 12 + 12 + 9 12 + 12 + 12 + 12 + 12	9+9+9+9+9 9+9+9+9+12 9+9+9+9+18 9+9+9+9+24 9+9+9+12+12 9+9+9+12+18 9+9+9+12+24 9+9+9+18+18 9+9+9+18+24 9+9+12+12+12 9+9+12+12+18 9+9+12+12+24 9+12+12+12 9+12+12+18 9+12+12+24 9+12+18+18 9+12+18+24 12+12+12+18 12+12+12+24
Six Zones Utilized (Allowable Combinations in kBTU)					9+9+9+9+9+9 9+9+9+9+9+12 9+9+9+9+9+18 9+9+9+9+9+24 9+9+9+9+12+12 9+9+9+12+12+18 9+9+9+12+12+12 9+9+9+12+12+18 9+9+12+12+12+12 9+12+12+12+12+12 12+12+12+12+12+12

Compatibility Information 5

Notes

System Configuration

- Different models of all matching indoor units can be combined together in any order to create a multi-zone system, up to a quantity of the number of available circuits.
- Not all available circuits need to be utilized with an attached indoor unit. 66% or higher of the total capacity utilization is recommended.
- The order in which indoor units are connected (by BTU rating) has no effect on system performance.

Indoor Unit Operation

- Every indoor unit attached to a multi-zone system will operate at a variable, self-regulated capacity based on the actual demand measured from the zone it is serving (between 30–100% of its rated capacity), or will turn off as needed.

Outdoor Unit Operation

- Outdoor units will also self-regulate their total output capacity based on the total demand read from all simultaneously running indoor units at any given moment, up to their maximum rated capacity.

Capacity Sizing Guidelines

- With multi-zone systems, the total demand from the outdoor unit will almost never exceed 75% of the total available capacity of the combined indoor unit group, due to load fluctuations among the indoor units.
- Therefore, total attached indoor unit capacity can be selected up to 133% of the supporting outdoor unit's rated capacity.
- In rare cases where total demand from the combined group of indoor units exceeds the rated capacity of the outdoor unit, the capacity of each indoor unit will be reduced accordingly.
- For high-demand applications, maximum loading of units may need to be reduced by up to 20% to avoid under-performance risks during extreme conditions.

Operating Mode Functions 6

Cooling Mode

- **Starting Cooling Operation:** When the unit is turned on for cooling, the system starts cooling operation if any indoor unit meets the cooling condition. The electronic expansion valve, outdoor fan, and compressor then begin operating.
- **Stop-Condition Handling:** If some of the indoor units satisfy the stop-condition while others do not, the compressor continues running and adjusts its frequency according to demand. For any indoor unit whose stop-condition is satisfied, the corresponding electronic expansion valve will close.
- **Switching From Cooling Mode to Heating Mode:** When switching the unit from Cooling mode to Heating mode, the system stops completely first, then restarts in Heating mode once the compressor has fully stopped.
- **4-Way Valve:** In Cooling Mode, the 4-way valve is closed.
- **Outdoor Fan Control in Cooling Mode:** The outdoor fan starts 5 seconds before the compressor. It runs at high speed initially, then switches to the set speed.
- **Compressor Frequency Control:** Based on the difference between room temperature and set temperature (δt = RT − ST), the electric controller controls the compressor's running frequency.
    - When the room temperature is considerably higher than the set temperature, the compressor will start operating at a high frequency.
    - As the room temperature decreases, the compressor's running frequency will also decrease.
    - When the room temperature is lower than the set temperature, the compressor will operate at a significantly low frequency.
- **Outdoor Temperature Affects the Running Frequency of the Compressor:** Outdoor temperature also affects the compressor's running frequency, based on the outdoor unit's inlet temperature.
    - When the outdoor temperature is about 86°F (30°C), the compressor will operate at high frequency.
    - If the unit is operating in Cooling mode and the outdoor temperature falls below 28°F (−2°C), the controller will shut down the compressor and display an error code.
    - When the ambient temperature rises above 34°F (1°C), the compressor will resume operation automatically.
- **Auto Fan Control in Cooling Mode:** In Cooling mode, the fan speed is determined by δt, as shown in the following diagram:

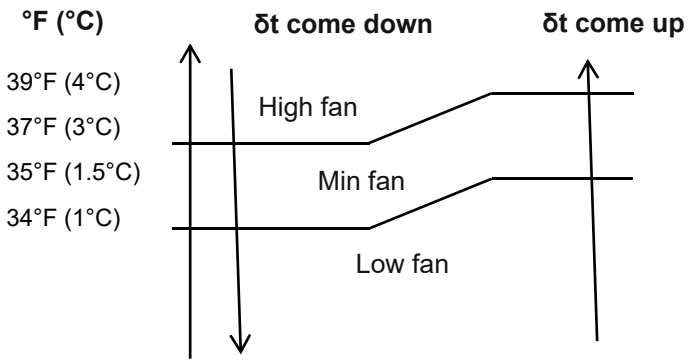

Operating Mode Functions 6

Heating Mode

- **Starting Heating Operation:** When the unit is turned on for heating, the system starts heating operation if any indoor unit meets the cooling condition.
- **Stop-Condition Handling:** If all indoor units satisfy the stop-condition, the compressor stops operating, and the outdoor fan stops 1 minute later.

  If only some of the indoor units satisfy the stop-condition, the compressor decreases the frequency immediately and operates according to demand.
- **Switching From Heating Mode to Cooling Mode:** When changing from Heating mode to Cooling mode or Dehumidification mode, the whole system will stop first, then restart under the required mode.
- **Defrosting Function:** When the defrosting condition is satisfied, the 4-way valve reverses direction and the outdoor fan stops. After the 4-way valve reverses direction, the compressor's frequency rises, and the unit will start defrosting under the cooling cycle.
- **Oil-Return Control in Heating Mode:** If the whole system runs at low frequency for an extended period, the system will perform an oil-return operation at high frequency. The oil-return operation will run for 60 seconds.
- **Compressor Frequency Control:** Similar to the frequency control in Cooling mode, the running frequency of the compressor is managed by the remote control. The unit changes its running frequency according to δt, making the room temperature closer to the set temperature.
- **Cold Air Prevention Control:** This function is intended to prevent cold air from being discharged when Heating mode is selected or defrosting is occurring. In Heating mode, if the air conditioner is turned off, the indoor fan motor will run for 30 seconds after the compressor stops operating. The indoor fan speed will be controlled, as shown in the following diagram:

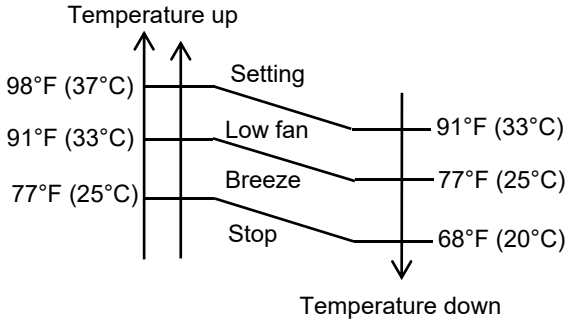

Operating Mode Functions 6

- **Auto Fan Control in Heating Mode:** In Heating mode, the fan speed is determined by δt, as shown in the following diagram:

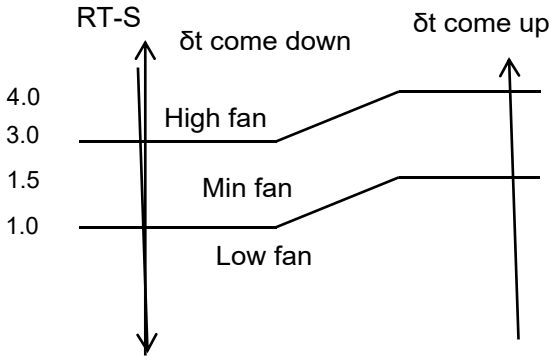

- **4-Way Valve Control:** In Heating mode, the 4-way valve will power on 8 seconds before the compressor and will cut off 2 minutes after the compressor.

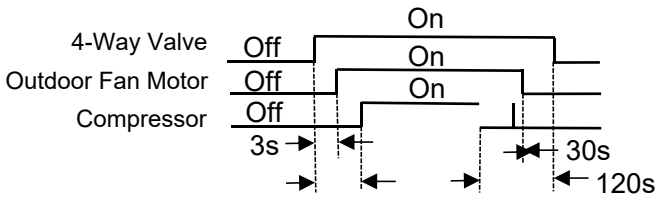

- **Outdoor Fan Motor Control:** In Heating mode, the outdoor fan will power on 5 seconds ahead of the compressor and will cut off 30 seconds after the compressor.

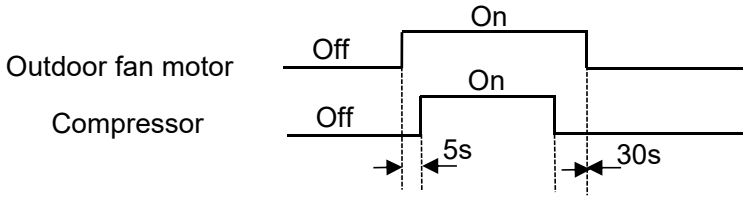

Dry Mode

The system for Dry operation uses the same refrigerant circuit as the Cooling operation.

When the system operates in Dry mode, it begins by operating in Cooling mode. The set temperature is room temperature (RT) 28°F (-2°C). Afterward, the system operates in Cooling mode with the lowest fan speed. During operation, the remote control cannot adjust the fan speed. However, the vane direction can be controlled.

In Dry mode, when the RT reaches or falls below 54°F (12°C), the compressor stops and begins operating again when the RT reaches or exceeds 57°F (14°C).

Operating Mode Functions 6

Defrosting Mode

Defrosting mode is controlled by the microprocessor. In this mode, all protection functions are available. the LED display shows the mode by blinking.

When the unit has operated for a total of 30 minutes, the compressor has operated continuously for more than 3 minutes, and one of the following conditions is met, the unit will enter Defrosting mode:

- When FrostDeg ≥ 23°F (-5°C) and OPT ≤ 23°F (-5°C), the defrosting interval time is 45 minutes.
- When 14°F (-10°C) ≤ FrostDeg < 14°F (-10°C) and OPT < FrostDeg, the defrosting interval time is 45 minutes.
- When 9°F (-13°C) ≤ FrostDeg < 14°F (-10°C) and OPT < FrostDeg, the defrosting interval time is 45 minutes.
- When 5°F (-15°C) ≤ FrostDeg < 9°F (-13°C) and OPT < FrostDeg, the defrosting interval time is 65 minutes.
- When 5°F (-15°C) ≤ FrostDeg < 14°F (-10°C) and OPT < FrostDeg, the defrosting interval time is 75 minutes.
- When FrostDeg < 5°F (-15°C) and OPT < 5°F (-15°C), the defrosting interval time is 75 minutes.

FrostDeg: C*OAT-α
OAT: Outdoor environment temperature

When OAT < 32°F (0°C), C = 0.8
When OAT ≥ 32°F (0°C), C = 0.6 α=8

Before the unit enters Defrosting mode, the compressor running frequency drops to a lower frequency first, and then the compressor shuts down.

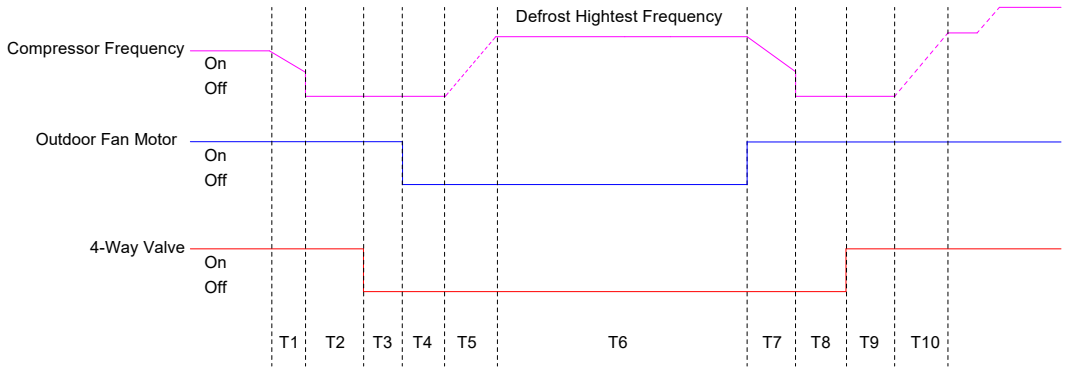

T	T1	T2	T3	T4	T5	T6	T7	T8	T9	T10
Times	Drop frequency or stop	50s	5s	5s	Rise frequency	2-11 min	Stop defrost	50s	10s	Rise frequency

Operating Mode Functions 6

Regardless of when the unit enters or exits Defrosting mode, the indoor fan motor speed remains controlled by the Cold Air Prevention Control.

If one of the following conditions is met, the unit exits Defrosting mode and changes to Heating mode:

- Outdoor coil temperature (OPT) exceeds 41°F (5°C) and remains above this level for 30 seconds.
- Outdoor coil temperature (OPT) exceeds 50°F (10°C) and remains above this level for 2 seconds.
- Continues the defrosting operation for 11 minutes.

Fan Mode

In this mode, only the indoor fan runs. The compressor, outdoor fan, and 4-way valve are closed.

Sleep Mode

When the "Sleep" button is pressed, the unit operates as the following:

- The indoor fan speed is set to low speed, the power and sleep lamps are on, and the temperature display will turn off after 30 seconds.
- If Cooling or Dry mode is selected with Sleep mode, the set temperature will rise by 1.8°F (1°C) after 1 hour and by 3.6°F (2°C) after 2 hours. After 3 hours, the set temperature will rise by 5.4°F (3°C) and remain at that level for 2 hours. It will then increase by 3.6°F (2°C). After 1 hour, the set temperature will remain unchanged.
- If Heating mode is selected with Sleep mode, the set temperature will decrease by 1.8°F (1°C) after 1 hour and by 3.6°F (2°C) after 2 hours. After 3 hours, the set temperature will decrease by 5.4°F (3°C) and remain at that level for 2 hours. It will then decrease by 3.6°F (2°C). After 1 hour, the set temperature will remain unchanged.

Emergency Operation

Pressing the Emergency Operation switch activates different modes with distinct sound signals:

- Cooling mode: A short "beep" sound.
- Heating mode: Two short "beep" sounds.
- Unit off: A long beeping sound (approximately 3 seconds)

If the unit is in emergency operation and receives a signal from the remote control, the unit will operate using only the remote control.

When the remote control is missing or has no battery power, press the Emergency Operation switch on the front of the indoor unit for a function test.

Note

- Do not press the Emergency Operation switch during normal operation.

Operating Mode Functions 6

Auto-Restart Function (Optional)

While the air conditioner is operating in a given mode, the main PCB stores its operation data — such as the operation mode and preset temperature — in the IC. If the power supply is interrupted and then recovers, the Auto-Restart function will activate, and the air conditioner will resume operation in its previous mode.

Auto-Restart Pre-Setting (Optional)

If the Auto-Restart function is needed, follow these steps to activate this function:

1. Unplug the unit's power cord from the socket.

2. Press and hold the Emergency button on the indoor unit. Then, insert the power cord plug back into the socket.

3. Press and hold the Emergency button for more than 10 seconds until three short beeps are emitted. The beeps indicate that the Auto-Restart function has been activated.

4. During the operation, press the Timer button 10 times in 8 seconds to turn off the Auto-Restart function.

Water Pump Control (Cassette & Duct Units Only)

When the unit operates in Cooling or Dry mode, the water pump turns on. Once the compressor turns off or the mode changes, the water pump stops after 10 minutes. If the unit detects that the water level is full, it stops and displays the water full error code.

When full water protection is cleared, the pump operates for 10 minutes and then turns off. If the water pump switch remains open for 8 continuous seconds, the system enters water full protection. If the water pump switch remains on for 180 continuous seconds, water full protection stops.

Protection Functions 7

Protection & Failure Display

- When a protection condition occurs, the remote controller will show an error code. The digital LED alternately displays the error code and set temperature.
- If more than one failure occurs, the display will show error codes according to the error list sequence.
- To verify signal communication between the indoor and outdoor units, any failure code related to the outdoor unit will remain displayed for 2 minutes after it has recovered.
- The sensor failure will clear automatically once the sensor reading returns to normal.

Protection Functions

Mode Conflict Protection for the Indoor Units

When the setting mode is different for each indoor unit, the system operates in the following status:

A. The system mode is determined by the indoor unit that turns on first, except when the indoor unit is in Fan mode. Cooling/Dry mode conflicts with Heating mode.

B. If the first indoor unit is in Fan mode and the second indoor unit is in Cooling or Heating mode, then the system will run in Cooling or Heating mode.

Time Delay for Safety Protection

A. 3-Minute Compressor Delay: The compressor stops for 3 minutes before restarting in order to balance the pressure in the refrigeration cycle. This delay protects the compressor.

B. 150-Second 4-Way Valve Delay: The 4-way valve stops for 150 seconds after the compressor delay, preventing abnormal refrigerant gas noise when Heating mode is turned off or the system switches to another mode.

Discharge Temperature Protection

The temperature sensor is located on the discharge pipe. When the temperature on the discharge pipe exceeds 239°F (115°C), the system control will shut down the compressor and the display board will show the error code.

Lower Voltage Protection

When the AC voltage falls below 160V or the DC voltage falls below 170V, the unit will shut down; it will recover when the AC voltage reaches or exceeds 255V or the DC voltage reaches or exceeds 390V.

Over-Voltage Protection

When the AC voltage exceeds 275V or the DC voltage exceeds 400V, the unit will shut down; it will recover when the AC voltage falls below 255V or the DC voltage falls below 390V.

Protection Functions

7

Overcurrent Protection

When the outdoor unit's current exceeds the safe limit, the controller will reduce the operating frequency or immediately shut down the unit and display the error code.

Condenser Temperature Protection

When the condenser temperature reaches or exceeds 149°F (65°C) and remains for 10 seconds, the air conditioner will shut down and show the error code. The air conditioner will recover when the condenser temperature falls below 126°F (52°C). The compressor will then stop for 3 minutes before restarting.

IPM Module Protection

The IPM module has high-temperature and overcurrent protection. If there is signal feedback to the IPM, the outdoor unit will shut down. The LED display on the outdoor PCB will show the error code.

Evaporator Freeze Protection

When the evaporator temperature falls below 36°F (2°C), the controller will reduce the compressor's operating frequency. When the evaporator temperature falls below 32°F (0°C) and remains below this level for 1 minute, the expansion valve will stop operating. When the unit enters freeze protection, the compressor will stop and later recover automatically.

Error Codes

8

Code	Reason	Remark
E0	Indoor unit and outdoor unit communication failure	Is the indoor unit and outdoor unit wiring connection correct?
E1	Indoor unit room temperature sensor failure	Indoor unit sensor and PCB
E2	Indoor unit coil temperature sensor failure	Indoor unit sensor and PCB
E3	Outdoor unit coil temperature sensor failure	Outdoor unit coil sensor and PCB
E4	AC-cooling system abnormality	Gas leakage? 2-way or 3-way valve blocked, etc.
E5	Indoor unit / outdoor unit mismatched failure (Specific performance test on the production line)	/
E6	Indoor unit PG fan motor / DC fan motor operating abnormally (Indoor unit failure)	Fan motor, fan blade, and PCB
E7	Outdoor unit ambient temperature sensor failure	Outdoor unit ambient sensor and PCB
E8	Outdoor unit discharge temperature sensor failure	Outdoor unit discharge sensor and PCB
E9	IPM / Compressor driving control abnormality	Outdoor PCB, compressor, etc.
EA	Outdoor unit current test circuit failure	Is the outdoor unit PCB broken?

Error Codes

8

Code	Reason	Remark
Eb	Abnormal communication between the main PCB and display board (Indoor unit failure)	Display board and main PCB
EC	Abnormal communication between the system module and drive module (Outdoor unit failure)	Outdoor unit PCB broken
EE	Outdoor unit EEPROM failure	1. Is the outdoor unit PCB broken? 2. Try to re-power on the unit.
EF	Outdoor unit DC fan motor failure	Fan motor and outdoor unit PCB
EH	Outdoor unit suction temperature sensor failure	Outdoor unit suction sensor and PCB
EU	Outdoor unit voltage test circuit abnormality	Outdoor unit PCB
En	Outdoor unit gas pipe temperature sensor failure	Outdoor unit gas pipe sensor and PCB
Ey	Outdoor unit liquid pipe temperature sensor failure	Outdoor unit liquid pipe sensor and PCB
P0	IPM module protection	Outdoor unit PCB
P1	Over- / Under-voltage protection	1. Is the outdoor unit PCB broken? 2. Is the power supply abnormal?
P2	Overcurrent protection	1. Is the outdoor unit PCB broken? 2. Is the power supply abnormal?

Error Codes

8

Code	Reason	Remark
P4	Outdoor unit discharge pipe over-temperature protection	Check the troubleshooting for details
P5	Sub-cooling protection in Cooling mode	Check the troubleshooting for details
P6	Overheating protection in Cooling mode	Check the troubleshooting for details
P7	Overheating protection in Heating mode	Check the troubleshooting for details
P8	Outdoor over-temperature / under-temperature protection	Check the troubleshooting for details
P9	Compressor driving protection (load abnormality)	Check the troubleshooting for details
PA	Communication failure for top flow unit / Preset mode conflict (Indoor unit failure)	Check the troubleshooting for details
F0	Infrared customer feeling test sensor failure (Indoor unit failure)	Query by pressing the remote control
F1	Electric power test module failure (Indoor unit failure)	Query by pressing the remote control
F2	Discharge temperature sensor failure protection	Check the troubleshooting for details
F3	Outdoor unit coil temperature failure protection	Check the troubleshooting for details

Error Codes

8

Code	Reason	Remark
F4	Cooling system gas flow abnormality protection	Check the troubleshooting for details
F5	PFC protection	Check the troubleshooting for details
F6	Compressor lack of phase / Anti-phase protection	Check the troubleshooting for details
F7	IPM module temperature protection	Check the troubleshooting for details
F8	4-way valve reversing abnormality	Check the troubleshooting for details
F9	Module temperature test circuit failure	Outdoor unit PCB
FA	Compressor phase-current test circuit failure	Outdoor unit PCB
Fb	Limiting/Reducing frequency for overload protection in Cooling/Heating mode	Query by pressing the remote control
FC	Limiting/Reducing frequency for high-power consumption protection	Query by pressing the remote control
FE	Limiting/Reducing frequency for module current protection (phase current of the compressor)	Query by pressing the remote control
FF	Limiting/Reducing frequency for module temperature protection	Query by pressing the remote control

Error Codes

8

Code	Reason	Remark
FH	Limiting/Reducing frequency for compressor driving protection	Query by pressing the remote control
FP	Limiting/Reducing frequency for anti-condensation protection	Query by pressing the remote control
FU	Limiting/Reducing frequency for anti-frost protection	Query by pressing the remote control
Fj	Limiting/Reducing frequency for discharge over-temperature protection	Query by pressing the remote control
Fn	Limiting/Reducing frequency for outdoor unit AC-current protection	Query by pressing the remote control
Fy	Gas leakage protection	Check the troubleshooting for details
bf	TVOC sensor failure (indoor unit failure)	Query by pressing the remote control
bc	PM2.5 sensor failure (indoor unit failure)	Query by pressing the remote control
bj	Humidity sensor failure (indoor unit failure)	Query by pressing the remote control
H1	High pressure switch failure	1. High pressure switch is damaged 2. High pressure switch connection is loose 3. Outdoor unit main PCB is damaged
H2	Low pressure switch failure	1. Low pressure switch is damaged 2. Low pressure switch connection is loose 3. Outdoor unit main PCB is damaged

Error Codes

8

Note

- **Remote Control Error Code Querying Function:** As shown in the table above, some of the codes (Fb–bj) require you to use the remote control for inspection. To inspect special failure codes (Fb–Fn, bj, etc.), press the Eco button 8 consecutive times within 8 seconds; the buzzer will then beep twice.

Troubleshooting 9

Malfunction	Possible Causes
The Appliance Does Not Operate	Power failure or plug pulled out
	Damaged indoor/outdoor unit fan motor
	Faulty protective device or fuses
	Faulty compressor thermo-magnetic circuit breaker
	Loose connections or plug pulled out
	It sometimes stops operating to protect the appliance
	Voltage higher or lower than the voltage range
	Active Timer-On function
	Damaged electrical control board
Strange Odor	Dirty air filter
Noise of Running Water	Back flow of liquid in the refrigerant circulation
A Fine Mist Comes From the Air Outlet	This occurs when the air in the room becomes very cold. For example, in Cooling or Dry mode.
A Strange Noise Can Be Heard	This noise is made by the expansion or contraction of the front panel due to variations in the temperature. This does not indicate a problem.
Insufficient Airflow (Either Hot or Cold)	Unsuitable temperature setting
	Obstructed air conditioner intakes and outlets
	Dirty air filter
	Fan speed set at minimum
	Other sources of heat in the room
	No refrigerant
The Appliance Does Not Respond to Commands	The remote control is not close enough to the indoor unit
	The remote control's batteries need to be replaced
	Obstacles between the remote control and the indoor unit's signal receiver
The Display is Off	Active Display function
	Power failure
Switch Off the Air Conditioner Immediately and Cut Off the Power Supply in the Event of:	Strange noises during operation
	Faulty electrical control board
	Spraying water or other liquids inside the appliance
	Overheated cables or plugs
	Very strong smells coming from the appliance

Troubleshooting

9

E0 Error Code: Indoor Unit and Outdoor Unit Communication Failure

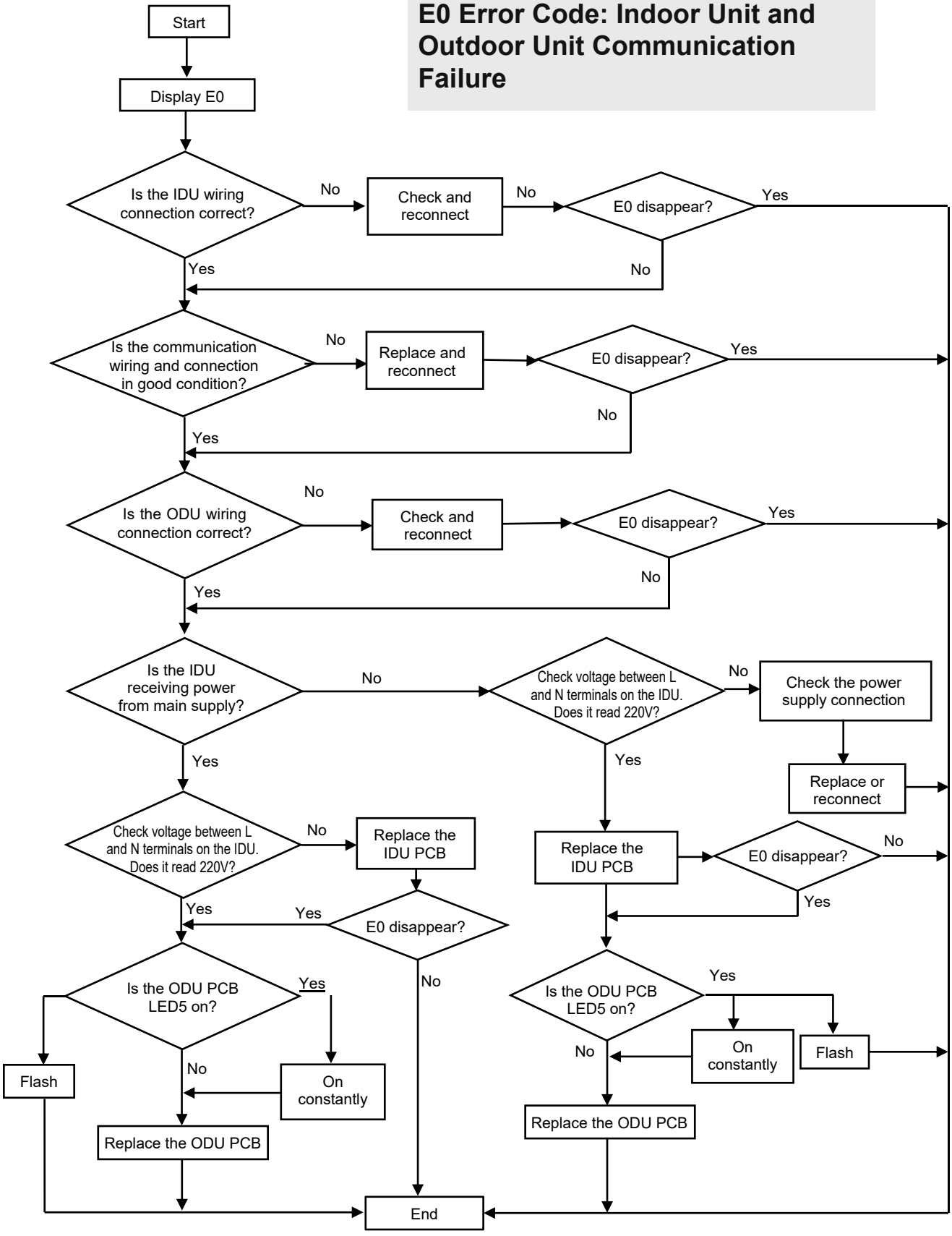

Troubleshooting

9

E1 / E2 Error Codes: Indoor Unit Temperature Sensor Failure and/or Indoor Unit Coil Temperature Sensor Failure

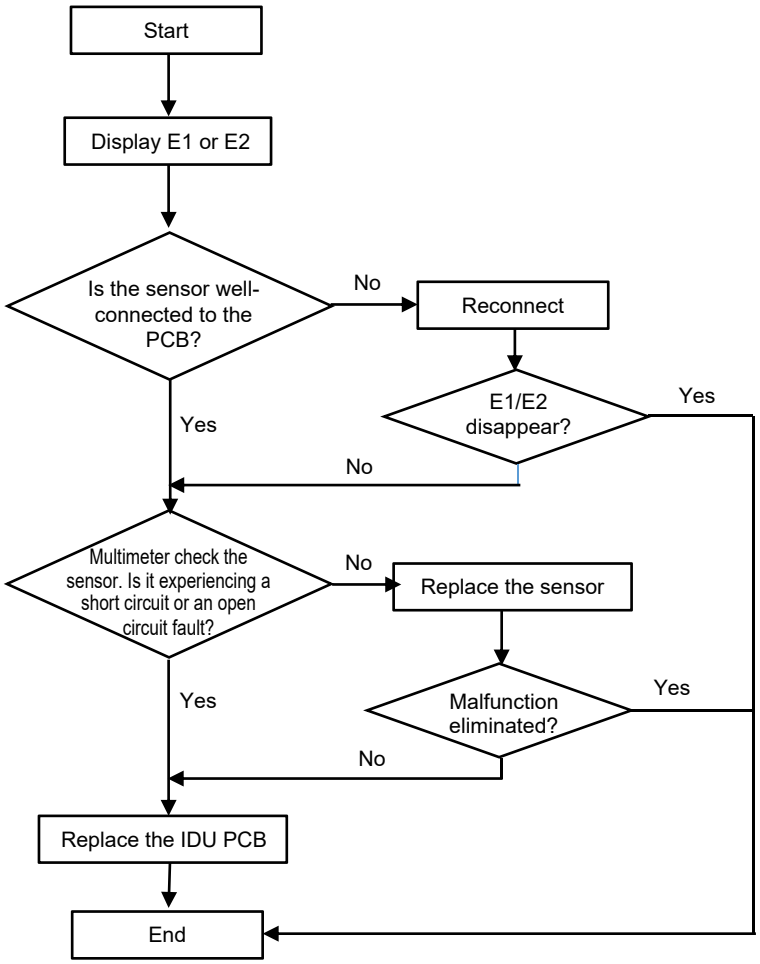

Troubleshooting

9

E6 Error Code: Indoor Unit Ventilation Failure (PG and DC Fan Motors Only

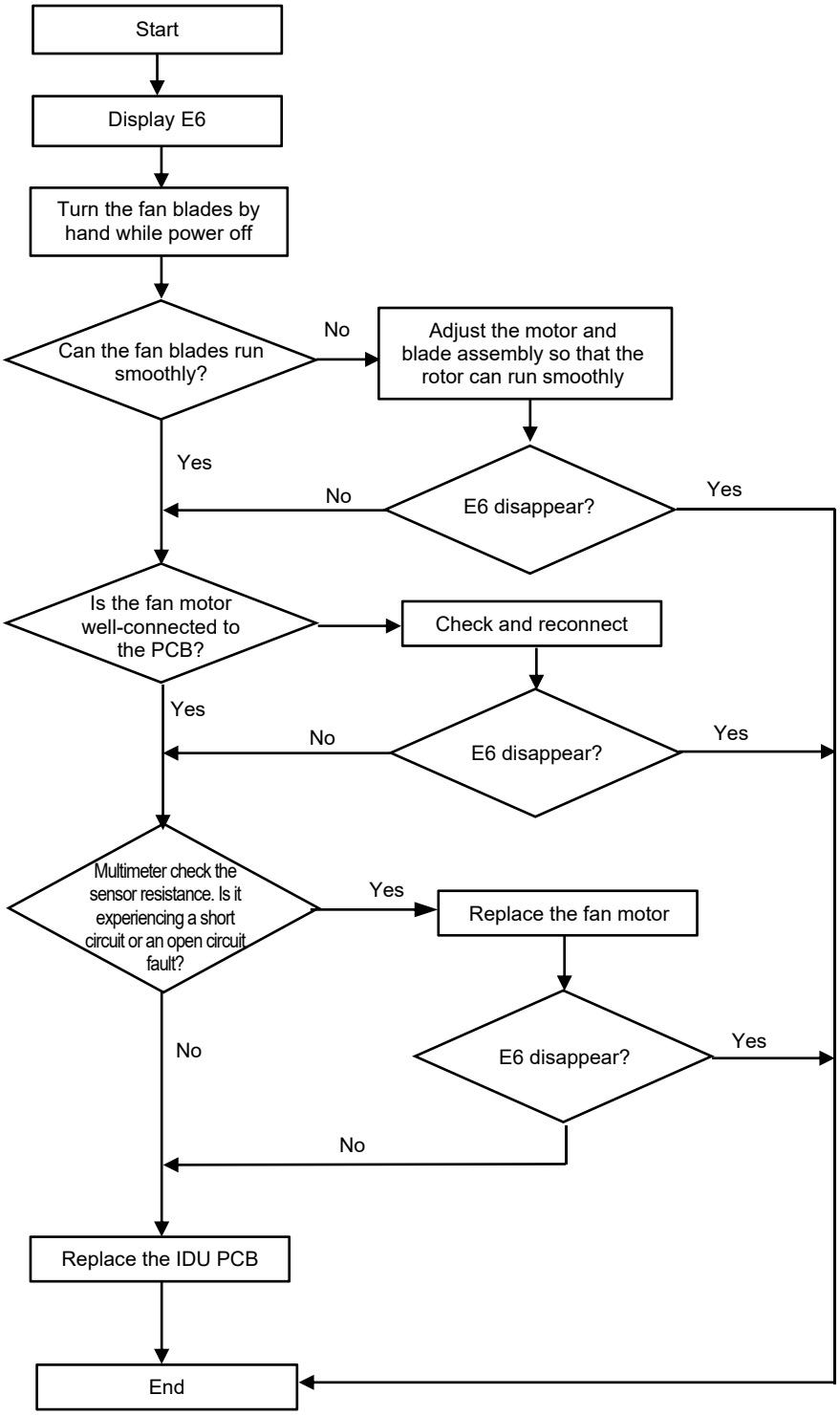

Troubleshooting

9

E3 / E7 / E8 / EH / En / Ey Error Codes:

If any of the sensor resistances experience a short circuit or an open circuit fault, the unit will display the error codes. The indoor and outdoor units turn off. When the sensor resistance recovers, the unit reverts to standby. The customer can switch on the unit directly.

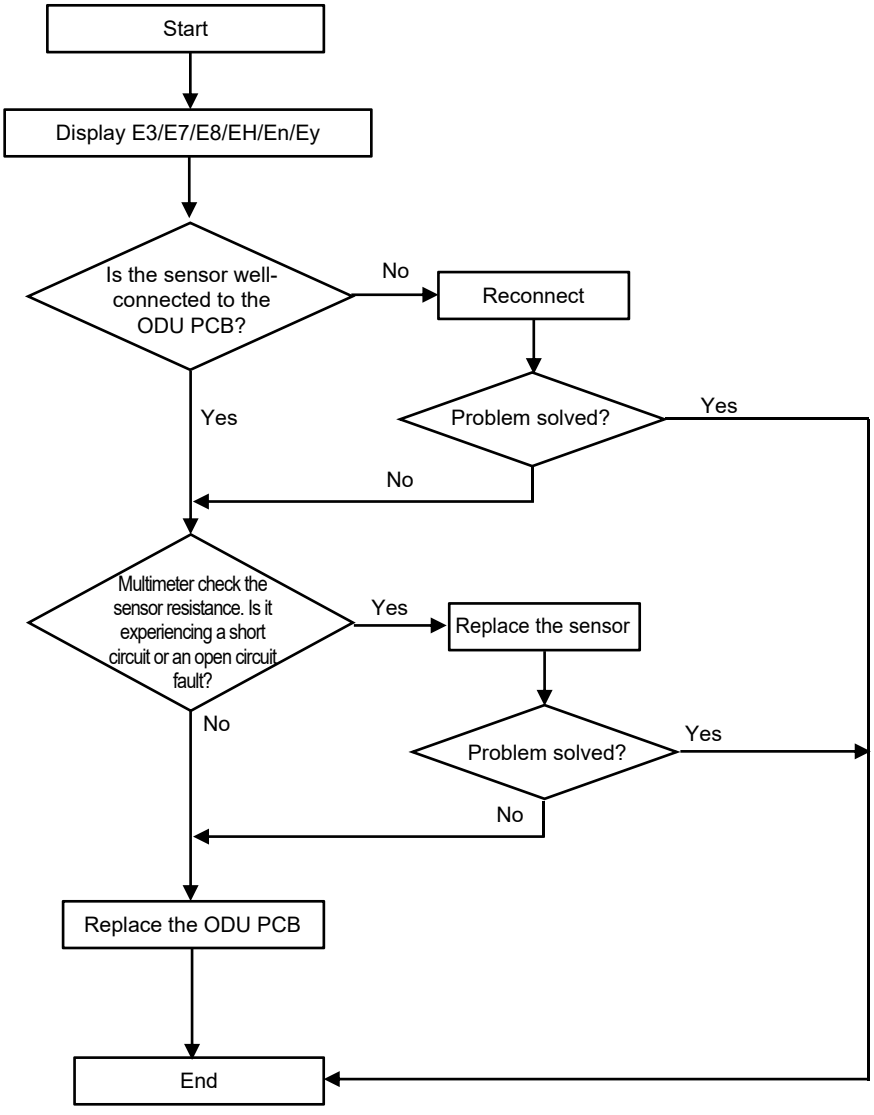

Troubleshooting

9

E9 Error Code: Outdoor Unit IPM and/or Compressor Drive Fault

If the unit stops operating for IPM protection six times consecutively, it will display the "E9" error code. The unit can't be recovered for operation, except by pressing the On/Off button.

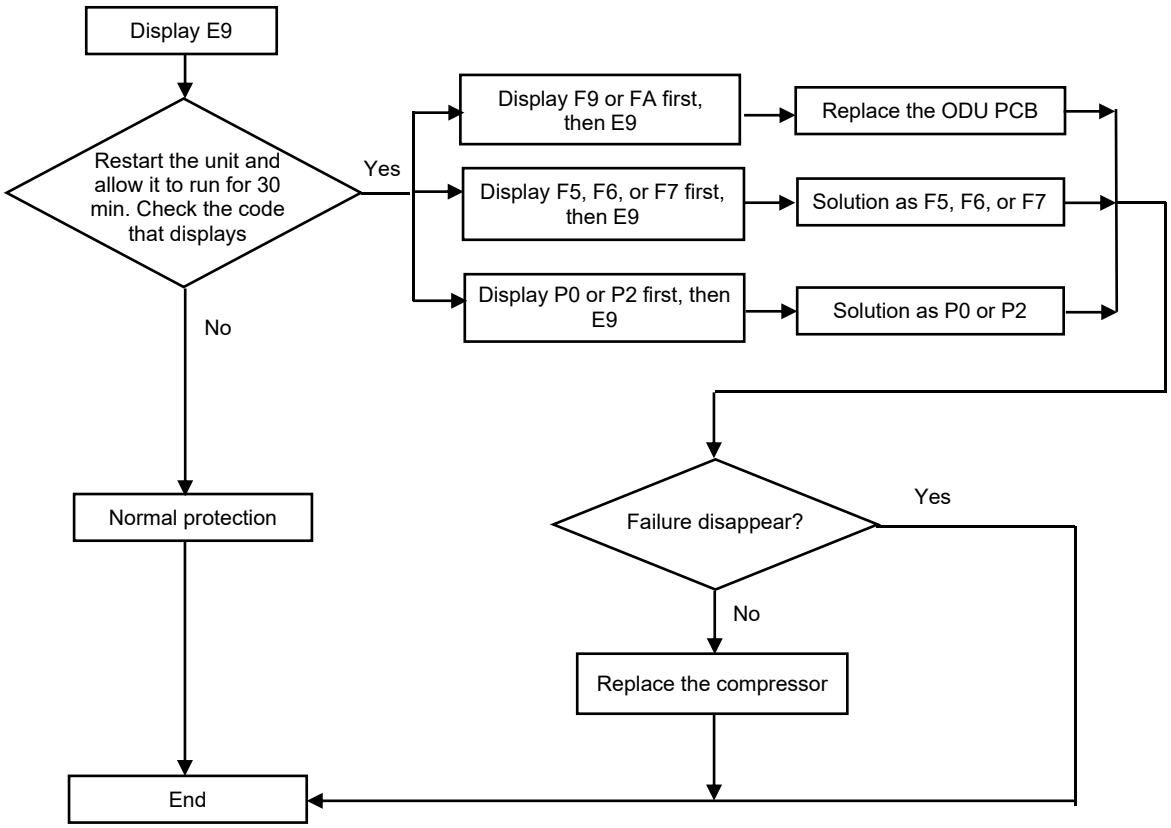

EA Error Code: Outdoor Unit Current Test Circuit Failure

Cause: Outdoor current sampling circuit failure or driver parameter mismatch

Solution: Replace the outdoor unit PCB.

Troubleshooting 9

Eb Error Code: Indoor Unit Abnormal Communication Between the Main Board and Operating Board

Cause:
1. The communication wire is damaged.
2. Outdoor unit main board is damaged.
3. Operating board is damaged.

Solution:
1. Replace the communication wire.
2. Replace the outdoor unit main board.
3. Replace the operating board

EC Error Code: Abnormal Communication Between System Module and Drive Module

Cause:
1. The outdoor unit PCB's communication circuit is damaged.
2. Program mismatch between the system module and drive module.

Solution:
1. Replace the outdoor unit PCB.

EE Error Code: Outdoor Unit EEPROM Failure

Cause: The outdoor unit main board is damaged.

Solution: Replace the outdoor unit PCB.

Troubleshooting

9

EF Error Code: Outdoor Unit DC Fan Motor Failure

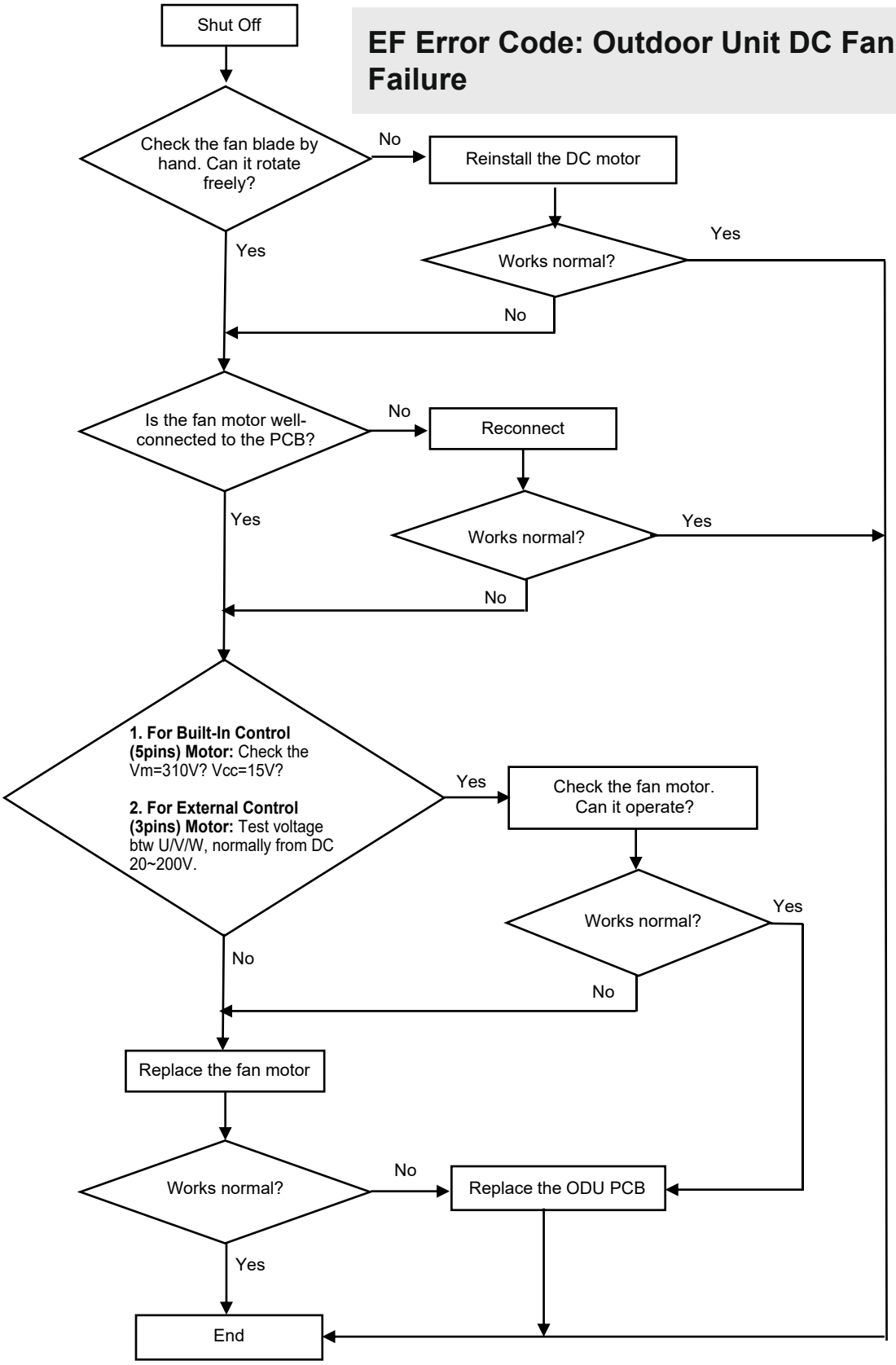

Troubleshooting

9

EU Error Code: Outdoor Unit Voltage Sensor Failure

After the power relay begins operating, if the tested effective voltage is less than 50V for 3 seconds continuously, the unit will display the "EU" error code.

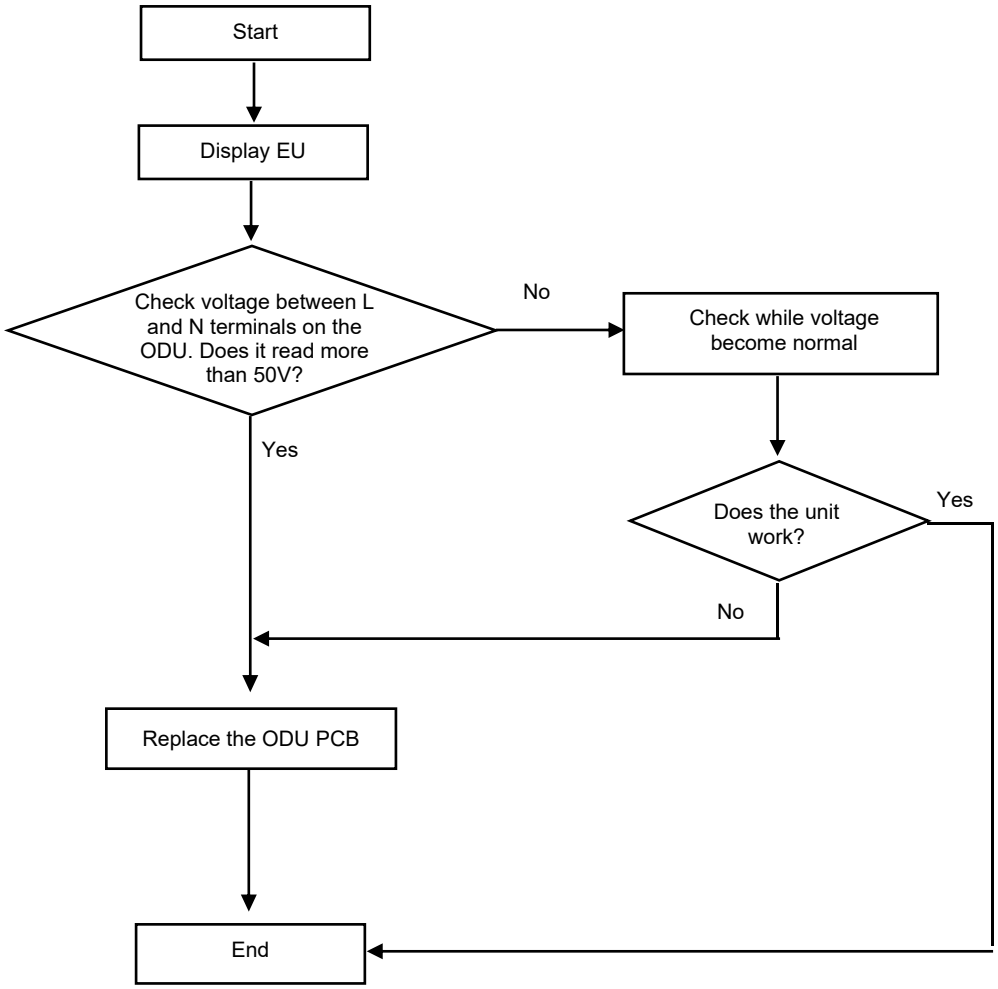

Troubleshooting

9

P0 Error Code: IPM Protection

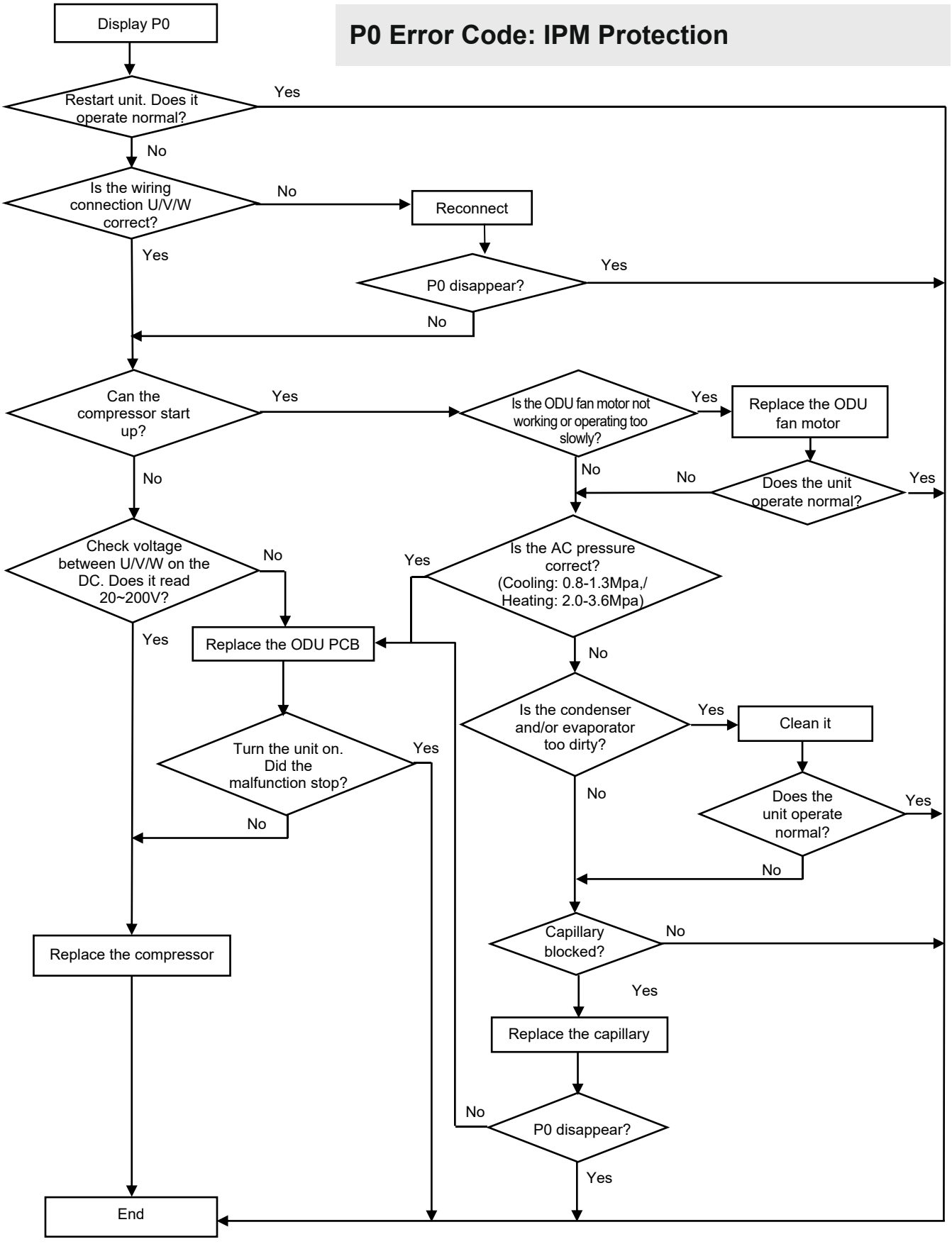

Troubleshooting

9

P1 Error Code: Over / Under-Voltage Protection

1. Test voltage between L and N. When the power supply V exceeds AC260V or V falls below AC150V, the unit will display "P1" error code. The unit will recover back to the previous status when V exceeds AC155V.

2. Test voltage on the large electrolytic capacitor of the outdoor unit PCB. When the DC busbar voltage V exceeds DC420V or V falls below DC150V, the unit will recover back to the previous status when DC190V < V < DC410V.

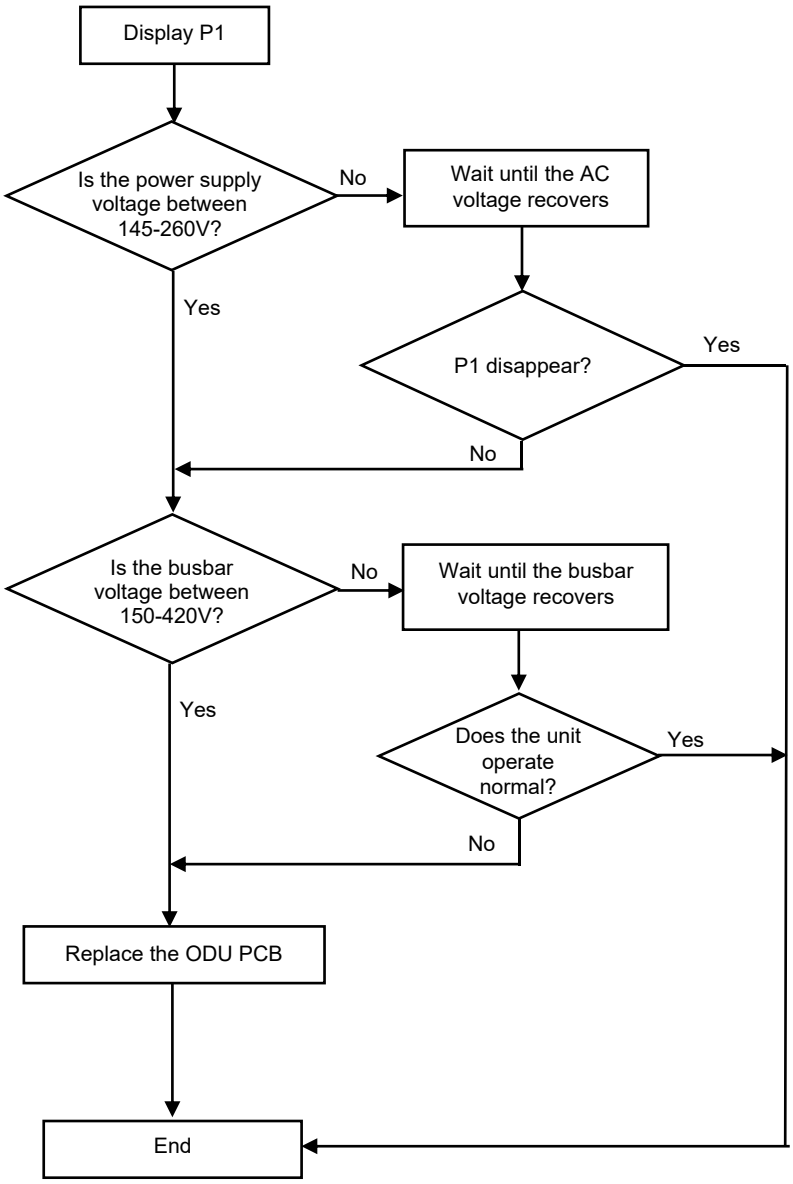

Troubleshooting

9

P2 Error Code: Over-Current Protection

When the unit's running current is more than Imax, the unit will stop operating and display the "P2" error code. Different models have different Imax values.

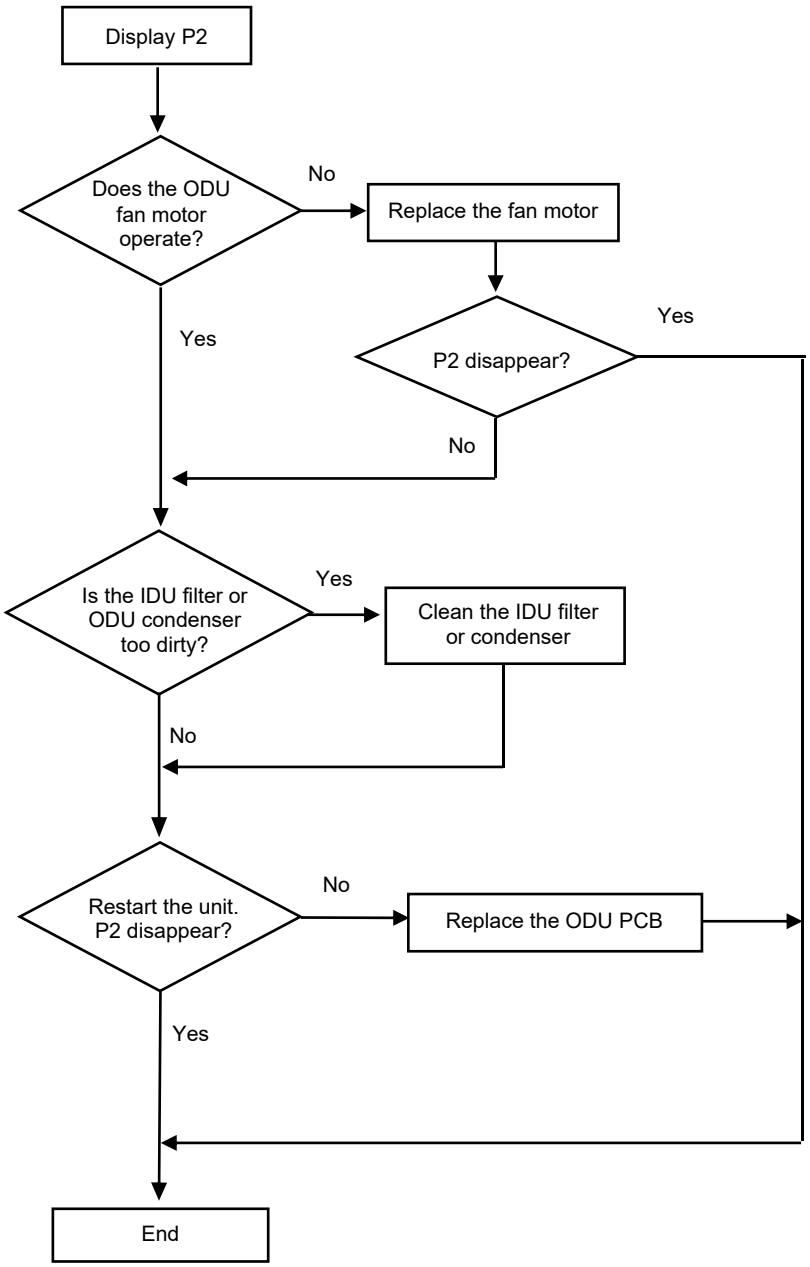

Troubleshooting

9

P4 Error Code: Outdoor Unit Discharge Temperature Overheating Protection

Troubleshooting

9

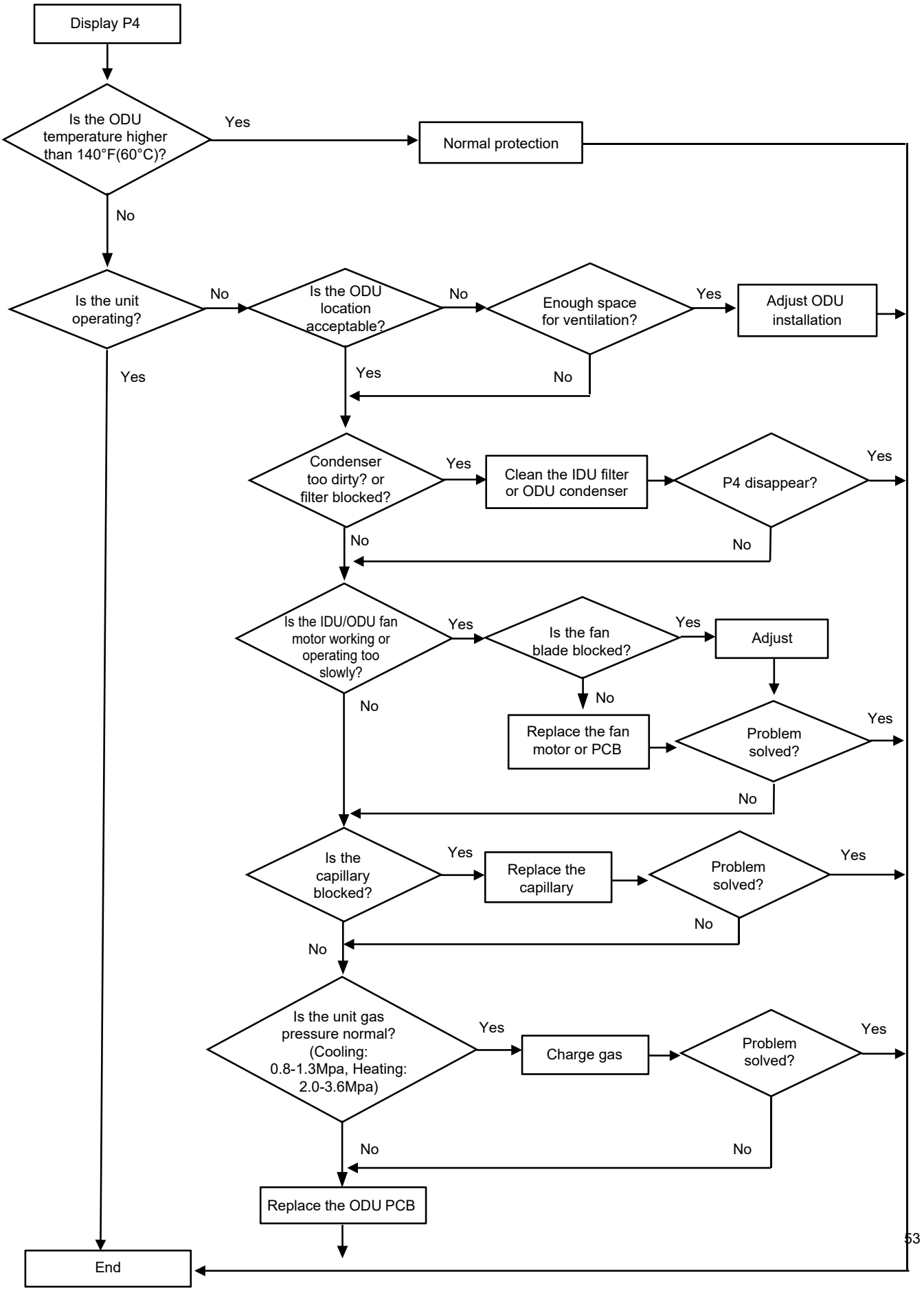

Troubleshooting

9

P5 Error Code: Sub-Cooling Protection in Cooling/Dry Mode

In Cooling or Dry mode, when the indoor unit evaporator coil temperature falls below 34°F (1°C) continuously for 3 minutes after the compressor starts up for 6 minutes, the CPU will switch off the outdoor unit and display the "P5" error code.

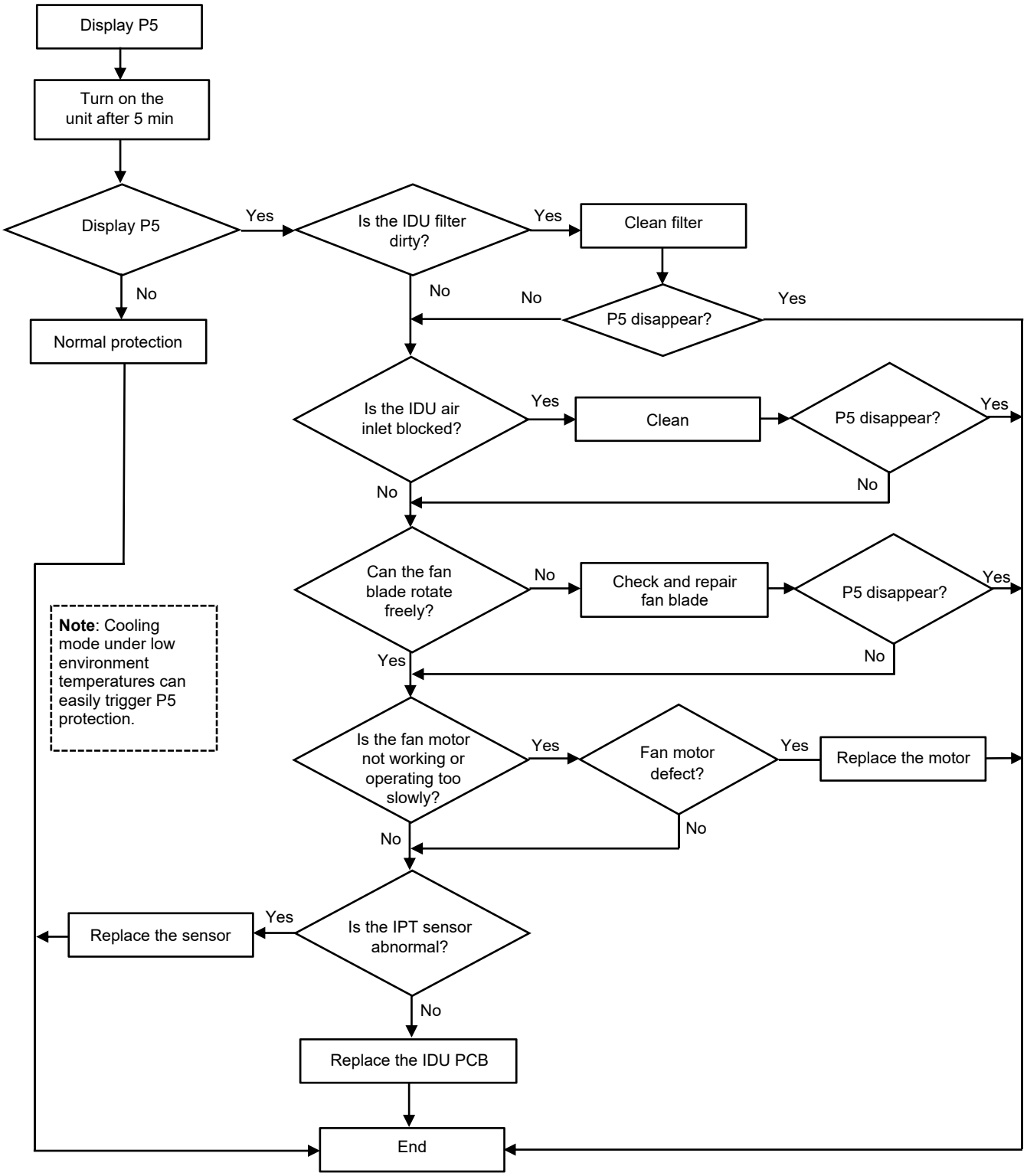

Troubleshooting

9

P6 Error Code: Overheating Protection in Cooling Mode

In Cooling or Dry mode, when the outdoor unit condenser coil temperature reaches or exceeds 144°F (62°C), the MCU will turn off the outdoor unit and display the "P6" error code.

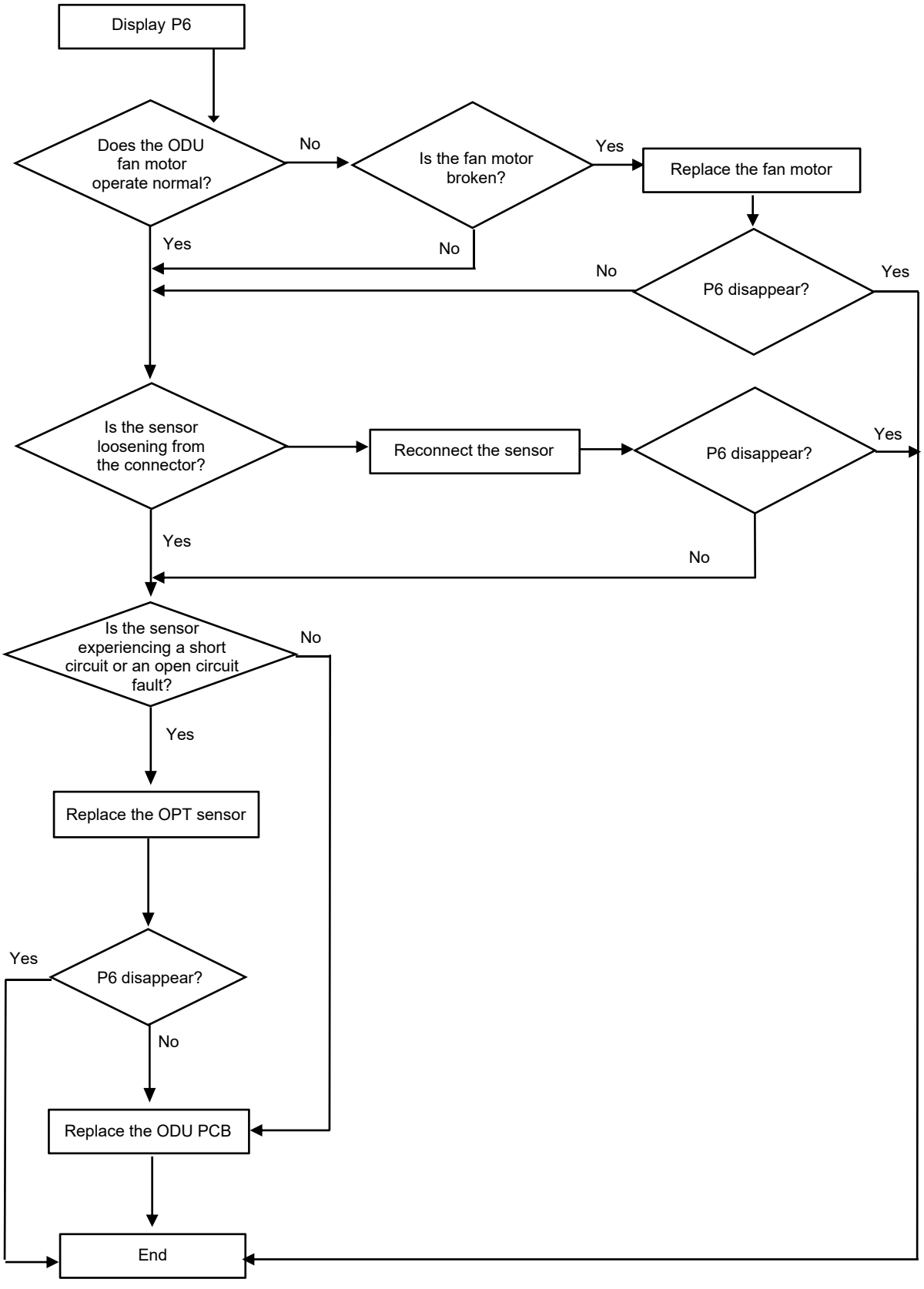

Troubleshooting

9

P7 Error Code: Overheating Protection in Heating Mode

In Heating mode, when the indoor unit evaporator coil temperature reaches or exceeds 144°F (62°C), the PCB will turn off the outdoor unit and display the "P7" error code.

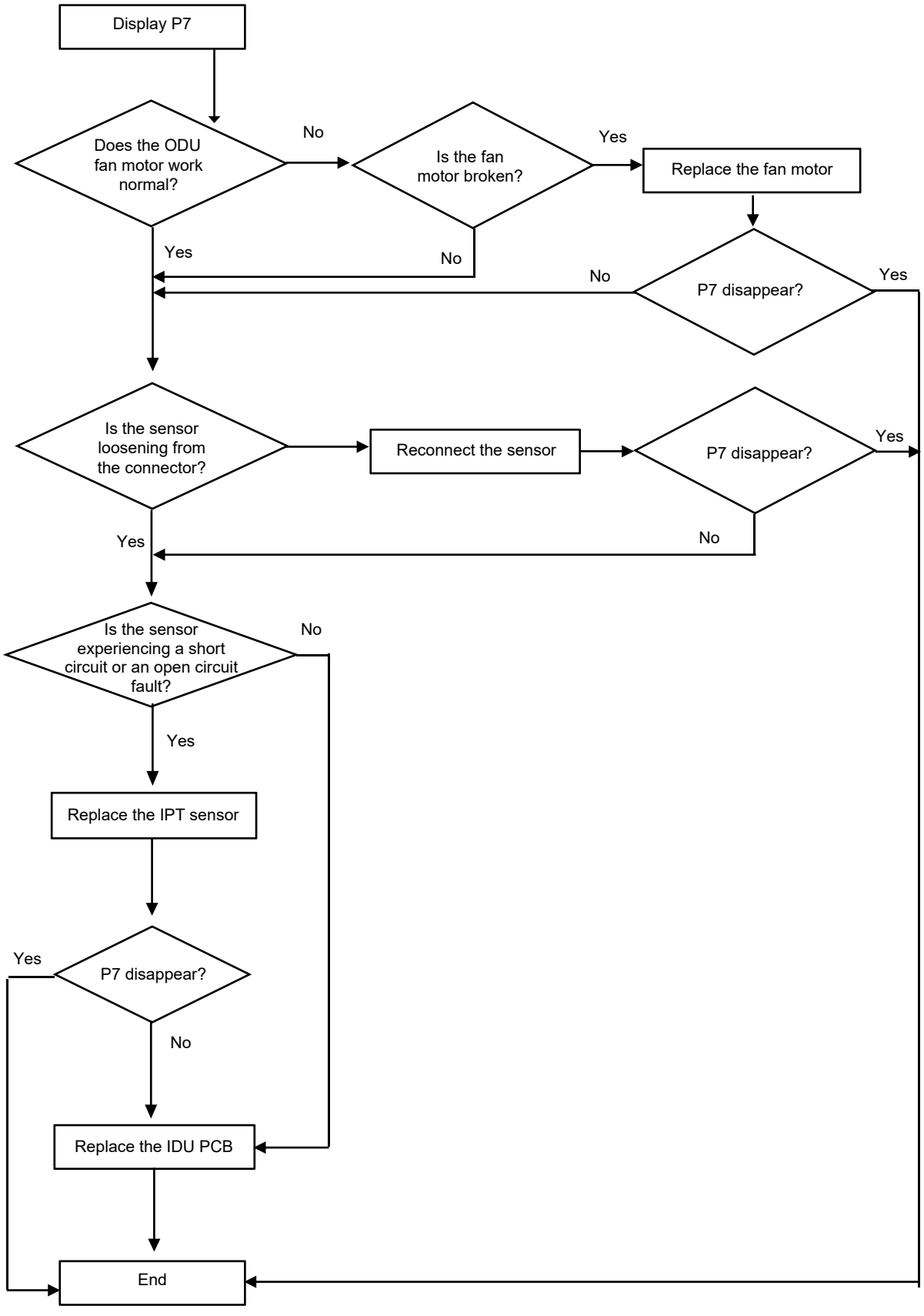

Troubleshooting

9

P8 Error Code: Outdoor Over-Temperature / Under-Temperature Protection

If the system experiences the following environment temperatures, the compressor will stop operating. After a 200 second delay, the indoor unit will display the "P8" error code.

In Cooling or Dry Mode: Outdoor unit ambient temperature falls below -4°F (-20°C) or exceeds 145°F (63°C).

In Heating Mode:
A. OAT ≥ 104°F (40°C)
B. 86°F (30°C) < OAT ≤ 104°F (40°C) and RT > 95°F (35°C)

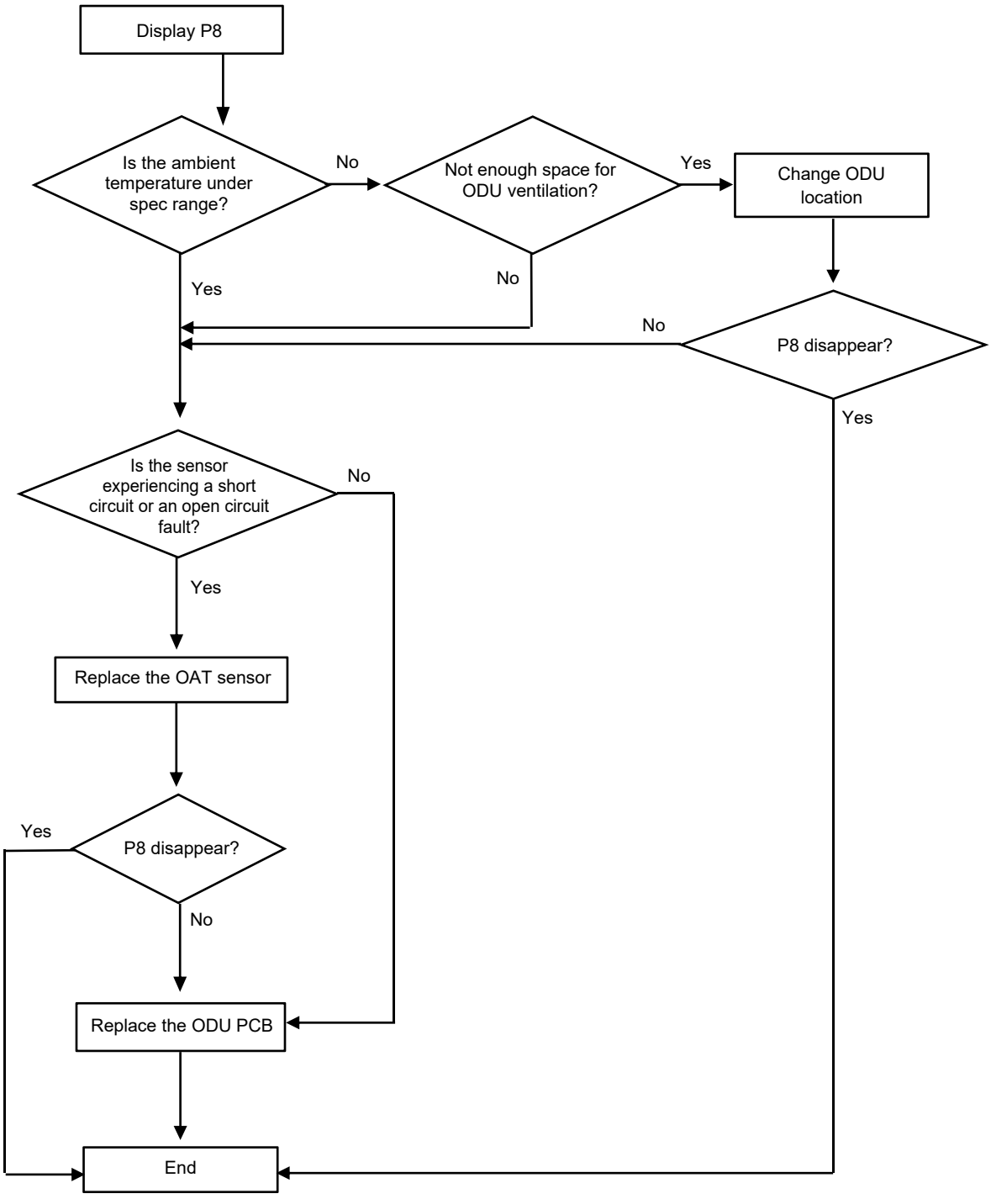

Troubleshooting

9

P9 Error Code: Compressor Driving Protection (Compressor Load Abnormality)

When the compressor starts operating or in the process of operating, if:
1. The MCU can't test the feedback signal from the compressor
2. Tested an abnormal signal from the compressor
3. The compressor startup is abnormal

The outdoor unit will turn off and display the "P9" error code. The unit will restart six times continuously. If it still can't operate normally, then the unit will display the error code again.

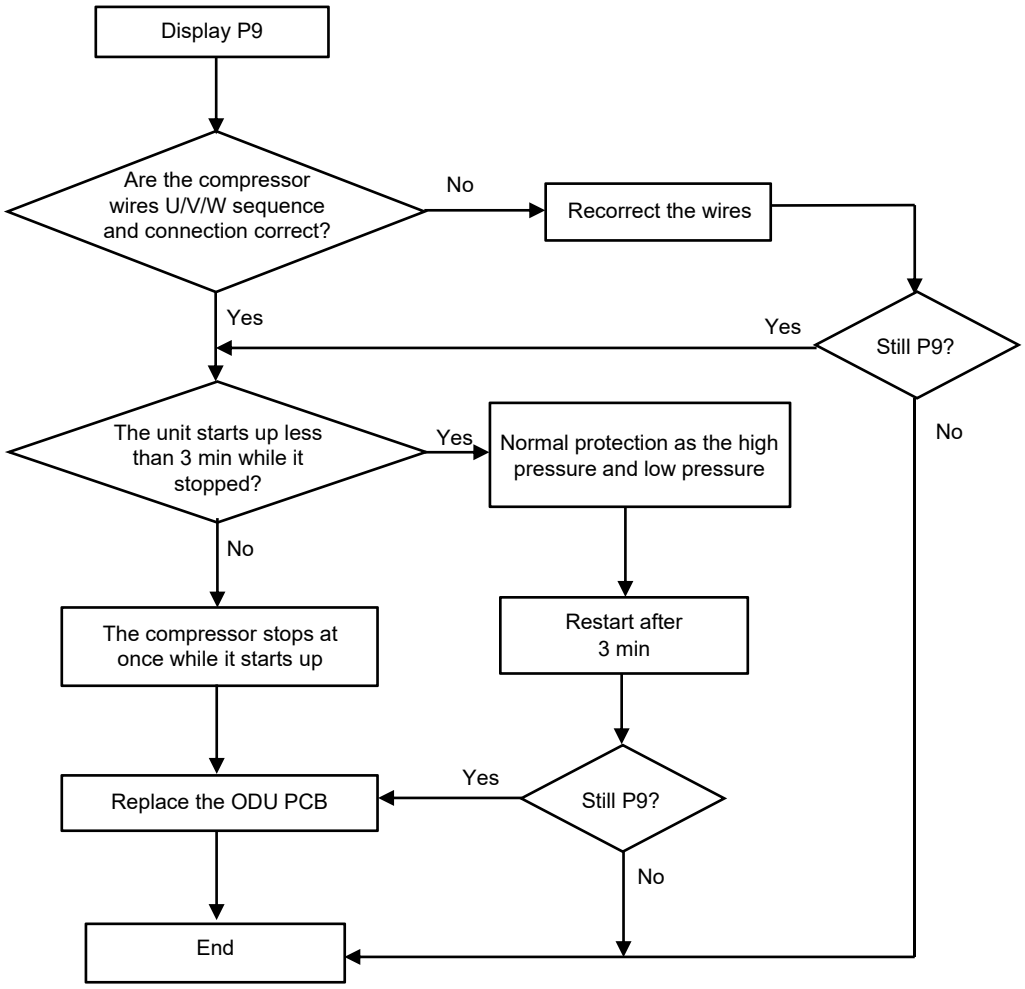

Troubleshooting

9

PA Error Code: Communication Failure for Top Flow Unit / Preset Mode Conflict

Cause No. 1: If the first indoor unit turned on operates in Cooling or Dehumidification mode, the other indoor units can operate only in Cooling, Dehumidification, or Air Supply mode. An indoor unit set to any other mode will report a mode conflict fault and will not be allowed to start up. This does not affect indoor units that are already running.

Cause No. 2: If the first indoor unit turned on operates in Heating mode, the other indoor units can operate only in Heating mode. An indoor unit set to any other mode will report a mode conflict fault and will not be allowed to start up. This does not affect indoor units that are already running.

Solution: Set all the indoor units to the same mode.

Troubleshooting

9

F4 Error Code: Cooling System Gas Flow Abnormality Protection

When the compressor starts operating, the unit will check the variation of the indoor unit coil temperature. If the installer forgets to open the 2-way or 3-way valve on the outdoor unit, the gas can't flow into the cooling system. The unit will undergo cooling system gas flow abnormality protection and display the "F4" error code.

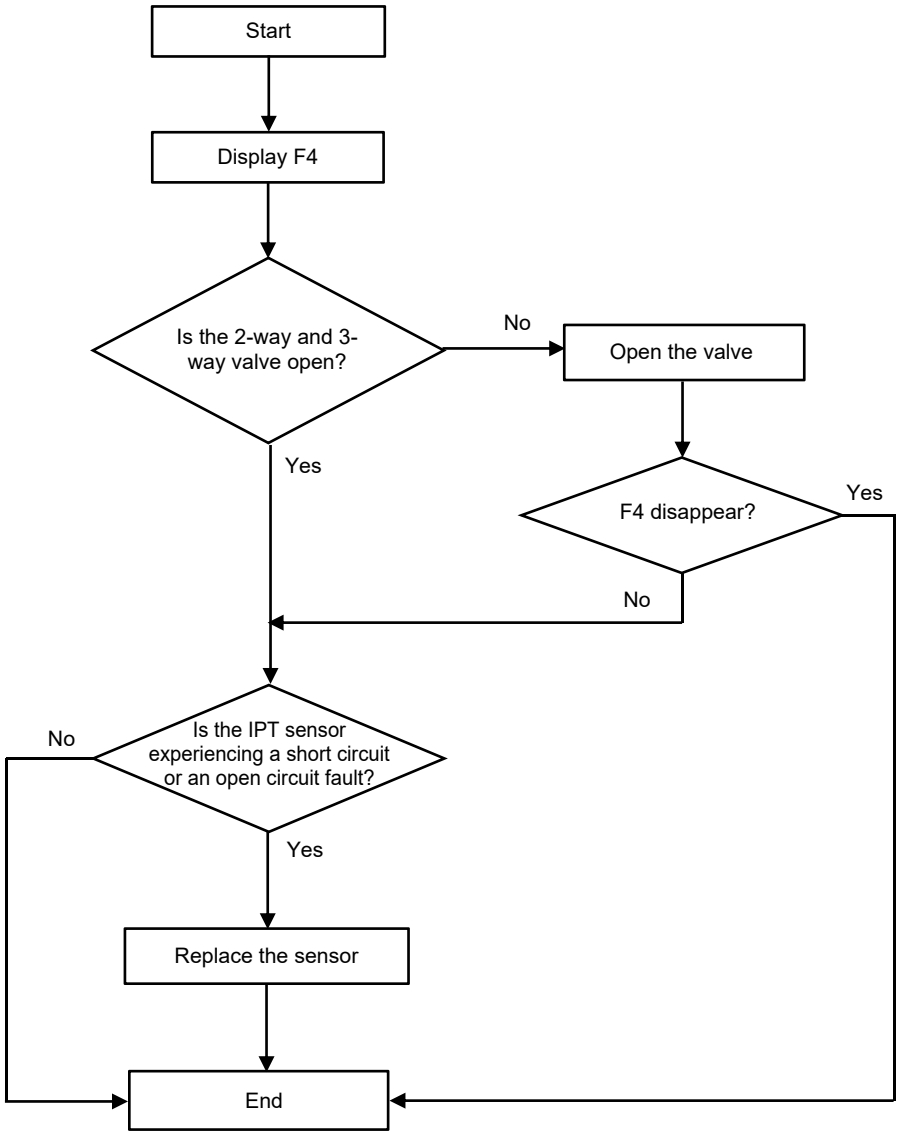

Troubleshooting

9

F5 Error Code: PFC Protection

If the system undergoes PFC over-current protection, the unit will display the "F5" error code.

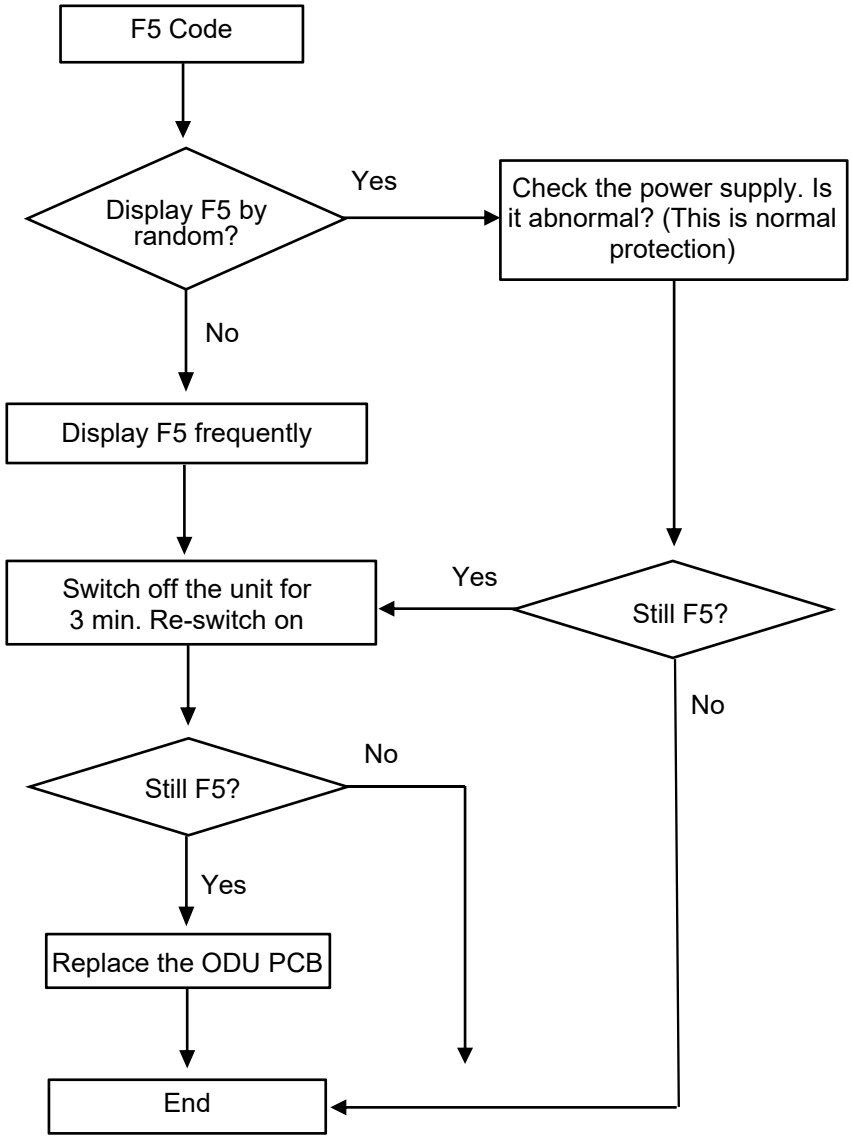

Troubleshooting

9

F6 Error Code: Compressor Lack of Phase / Anti-Phase Protection

If the outdoor unit PCB can't test one or even three phases of the compressor's current, the unit will undergo anti-phase protection and display the "F6" error code.

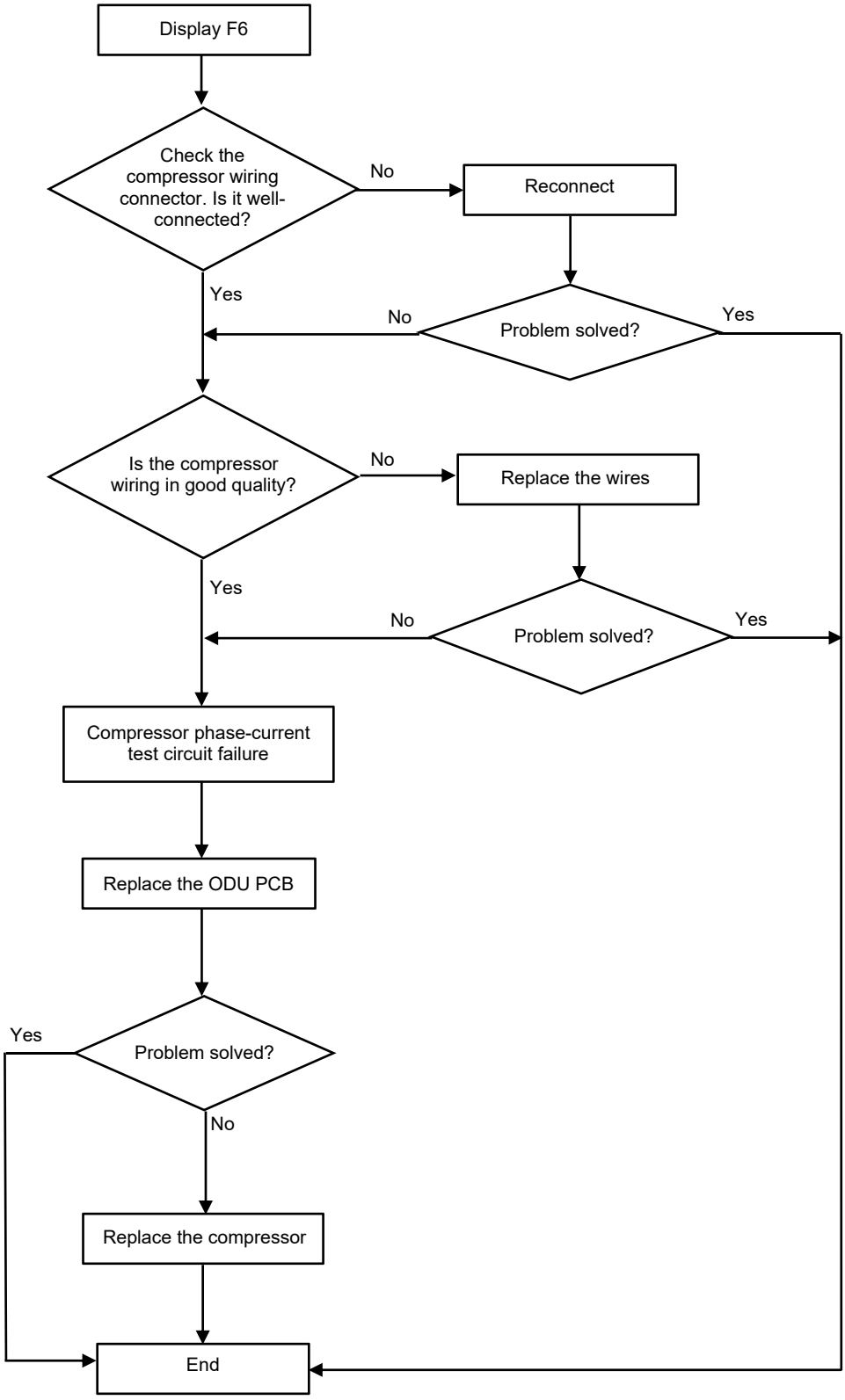

Troubleshooting

9

F7 Error Code: Module Temperature Protection

If the IPM temperature is more than 203°F (95°C), the system will undergo IPM over-temperature protection and display the "F7" error code.

Troubleshooting

9

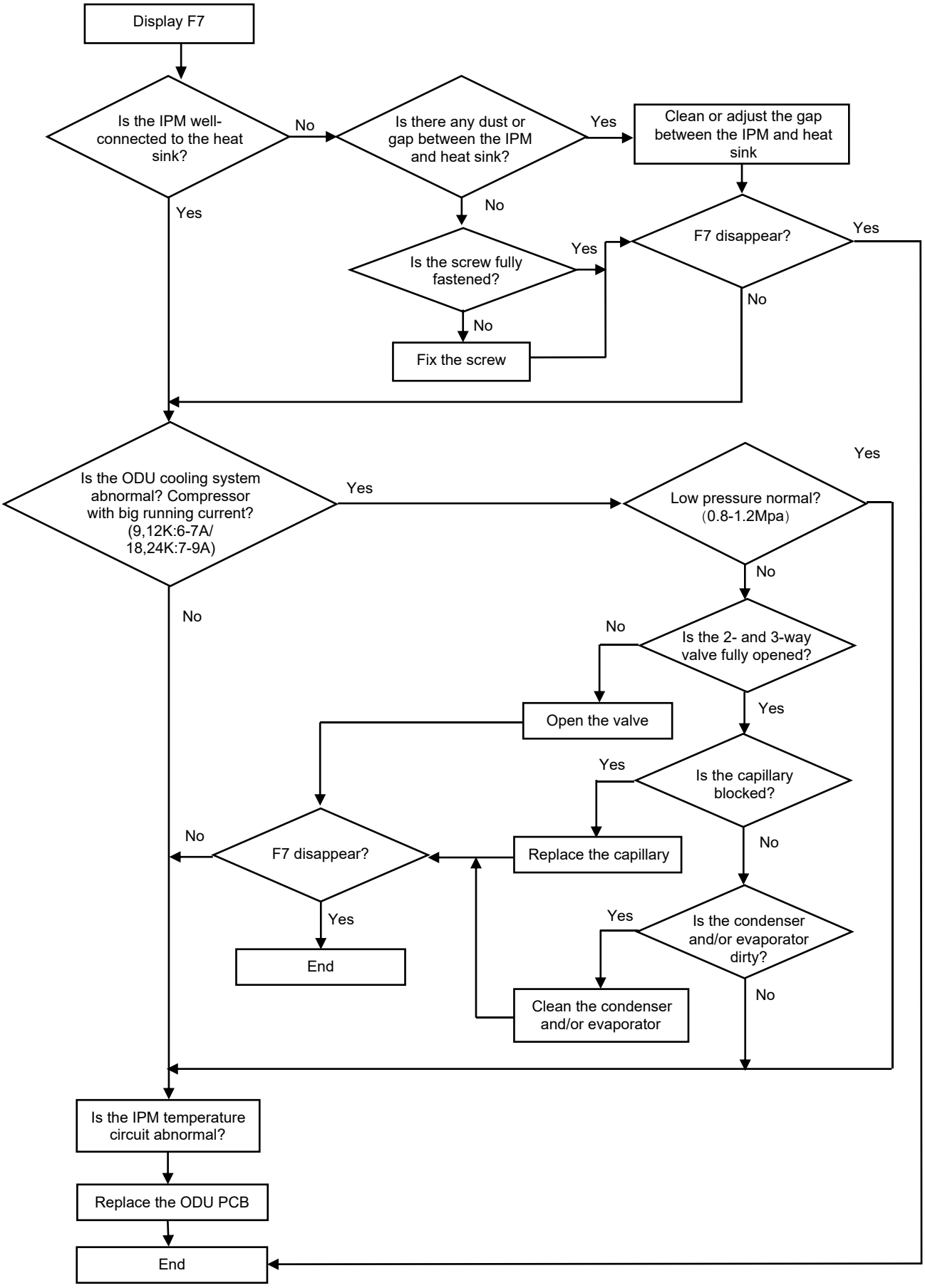

Troubleshooting

9

F8 Error Code: 4-Way Value Reversing Abnormality

In Heating mode, if the indoor unit coil temperature (room temperature) is measured at 41°F (5°C) or lower after the compressor operates for 8 minutes, the unit will display the "F8" error code.

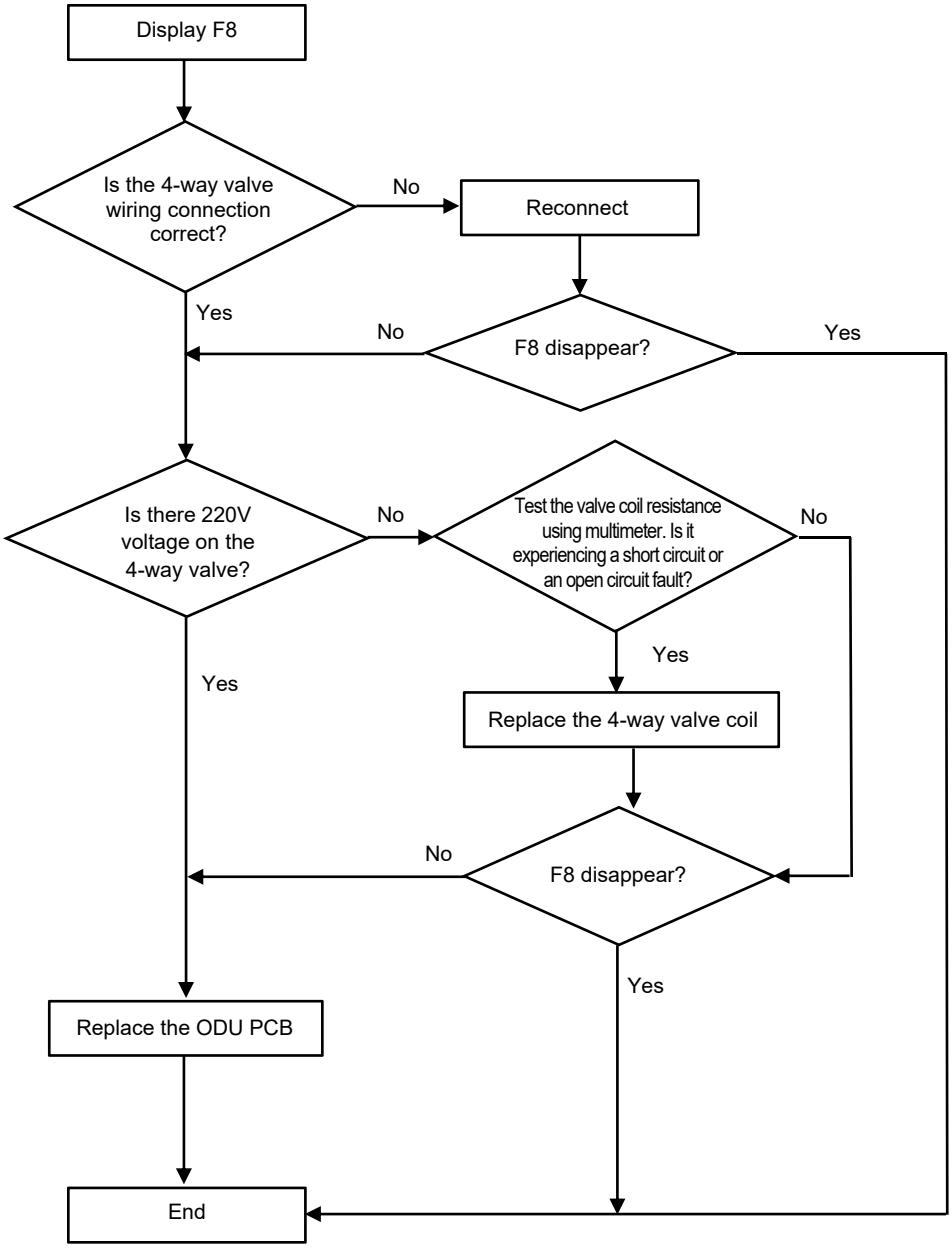

Troubleshooting

9

F9 Error Code: Module Temperature Test Circuit Failure

Reason: The IPM module temperature test circuit failure.

Season: Replace the outdoor unit PCB.

FA Error Code: Compressor Phase-Current Test Circuit Failure

Reason: The compressor phase-current test circuit failure

Season: Replace the outdoor unit PCB.

Troubleshooting

9

Fy / E4 Error Code: Gas Leakage Protection & Abnormal AC Cooling System

After the compressor operates at high frequency for 9 minutes, if the indoor unit evaporator and outdoor unit condenser temperatures show only minor variations compared to previous readings but the compressor discharge temperature remains high, the unit will display the "Fy" or "E4" error code.

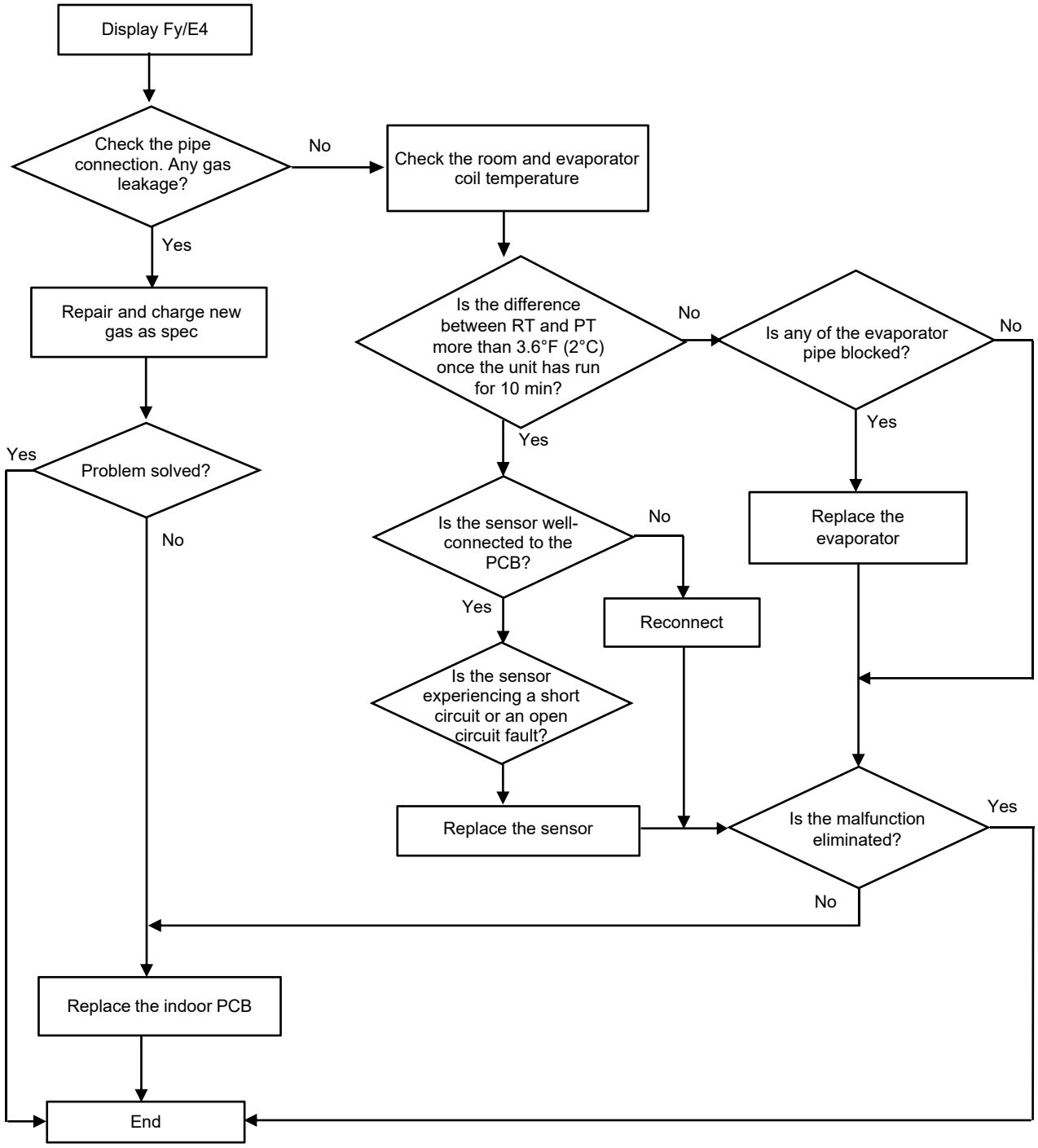

Troubleshooting

9

H1 / H2 Error Code: High Pressure Switch Failure & Low Pressure Switch Failure

1. The high-pressure switch is installed at the discharge pipe of the system. When the pressure on the high-pressure side of the system exceeds the preset protection value, the protection mechanism is triggered. The "H1" error code displays.

2. The low-pressure switch is installed at the suction pipe of the system. When the pressure on the low-pressure side of the system falls below the preset protection value, the protection mechanism is triggered. The "H2" error code displays.

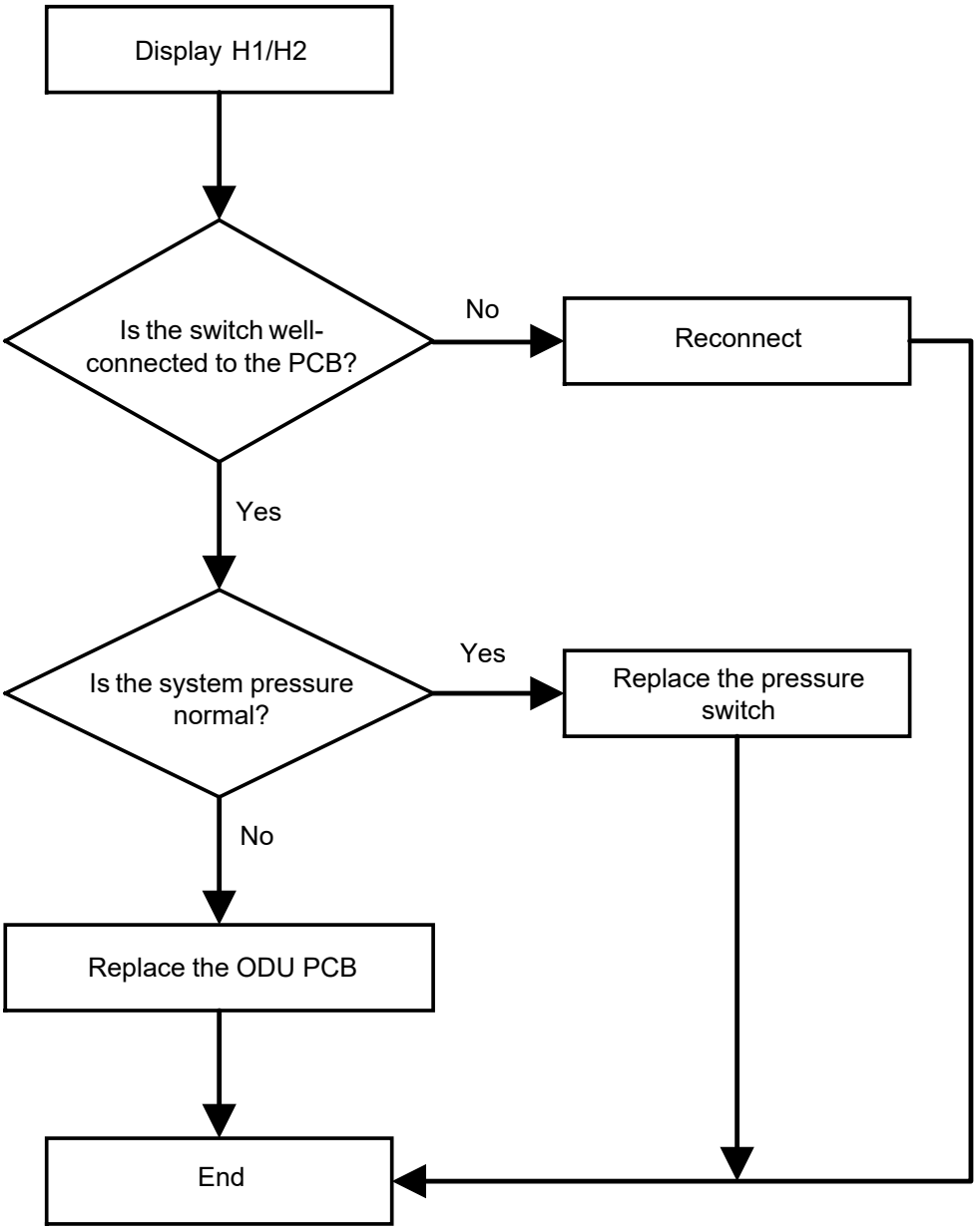

Control Board Wiring Diagrams 10

Outdoor Condensing Unit Control Board Wiring Diagrams

YN020GLSI24M2G

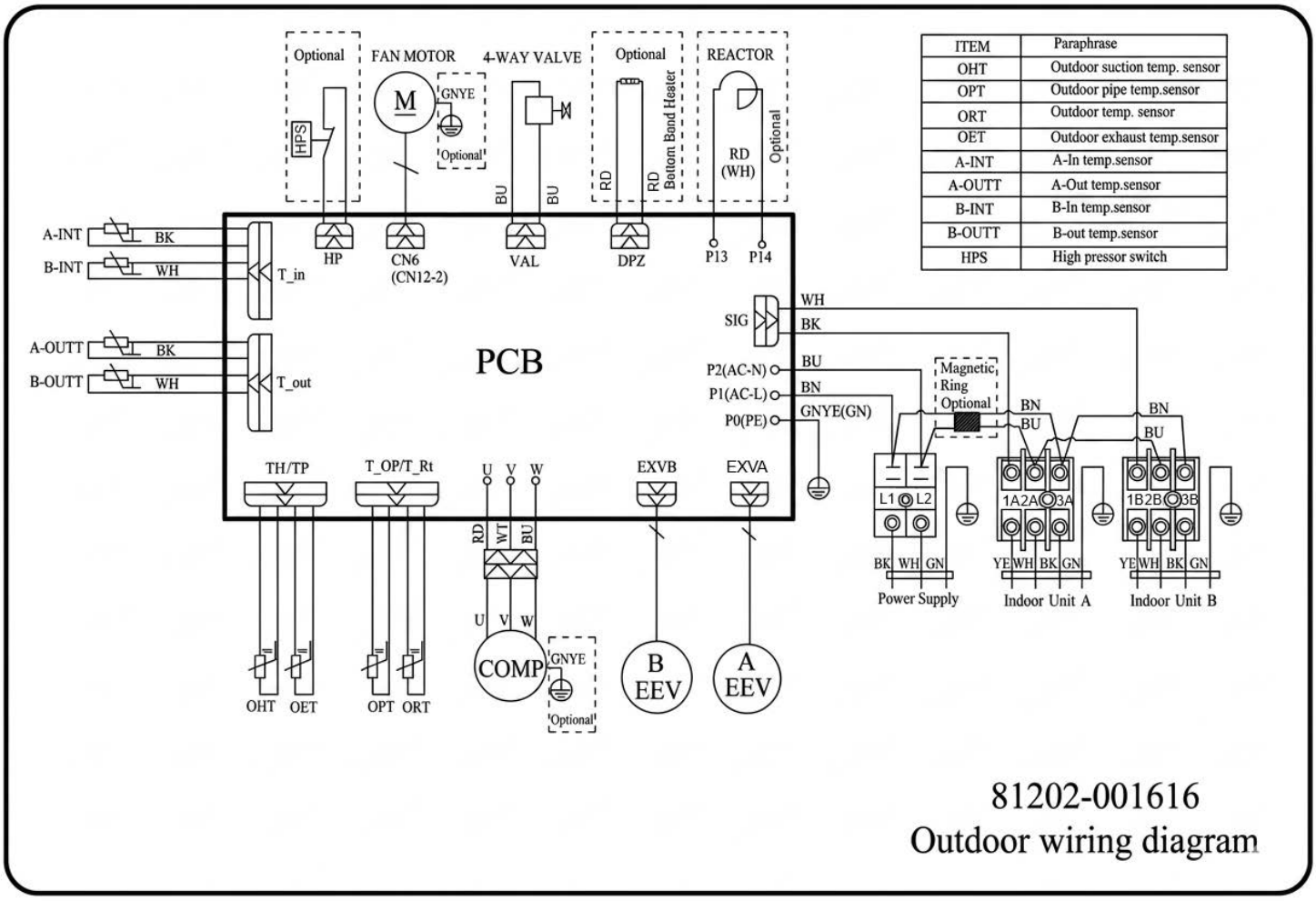

Control Board Wiring Diagrams 10

YN030GLSI24M3G

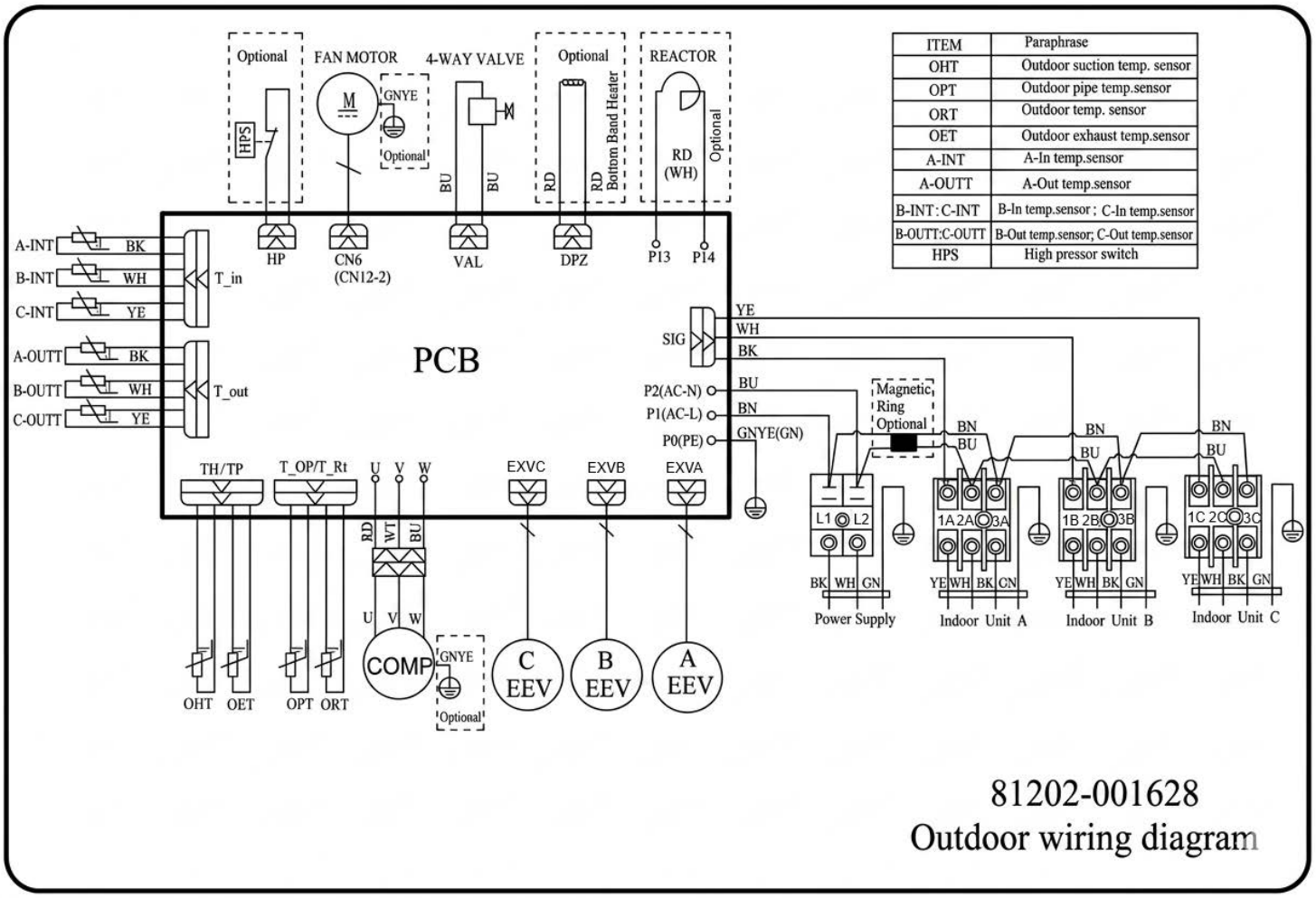

Control Board Wiring Diagrams 10

YN040GLSI24M4G

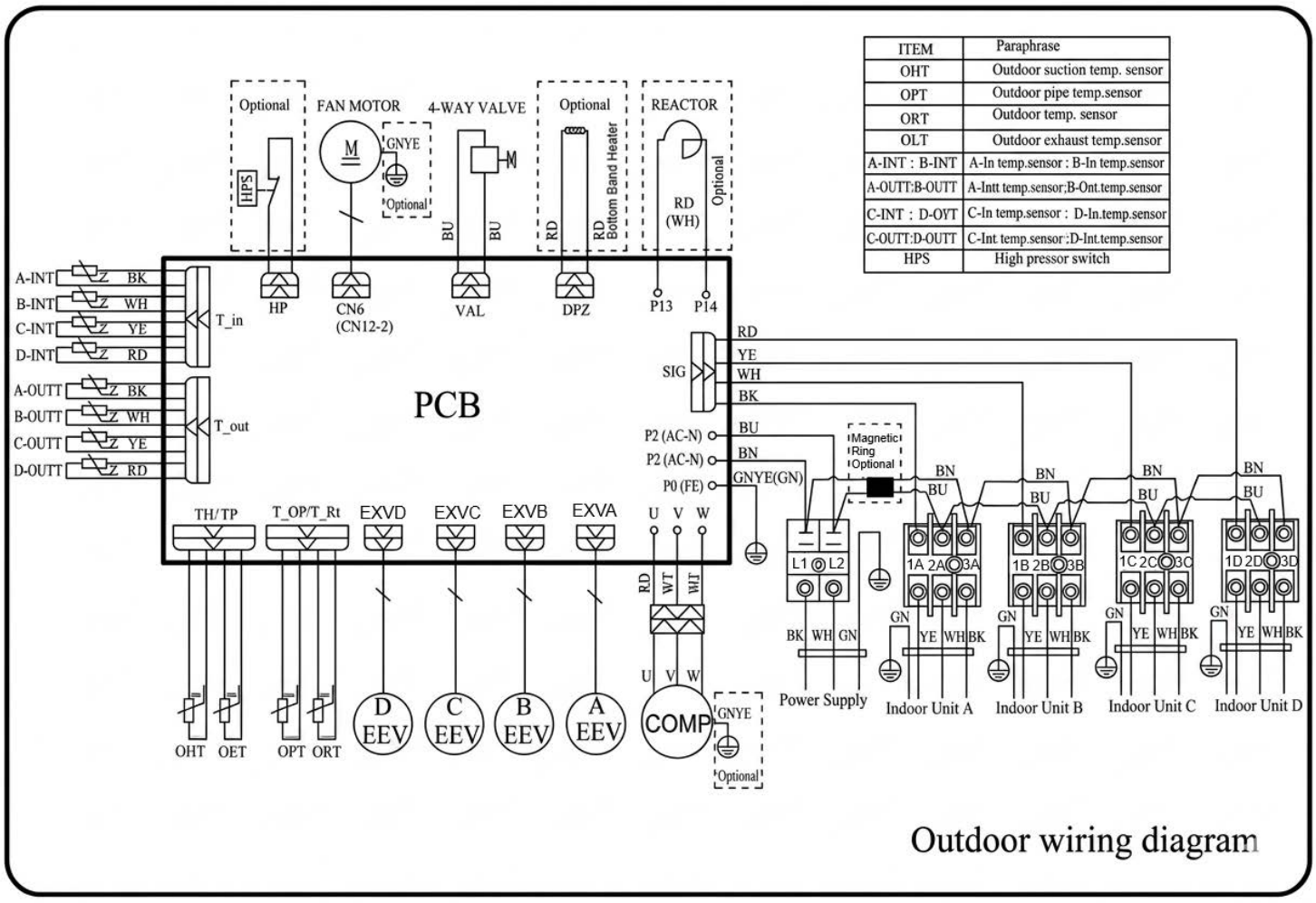

Control Board Wiring Diagrams 10

YN050GLSI24M5G

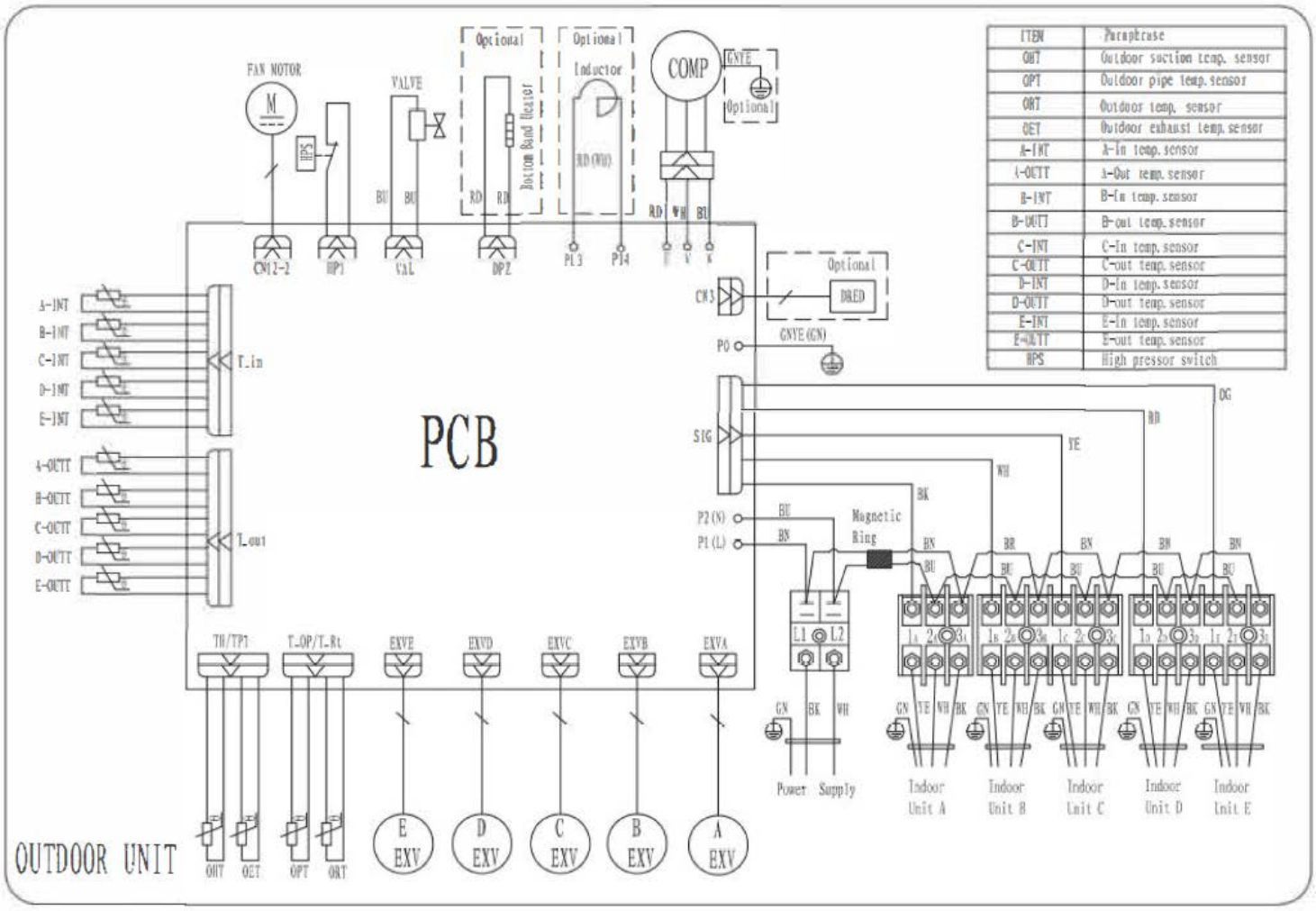

Control Board Wiring Diagrams

10

YN060GLSI24M6G

Control Board A

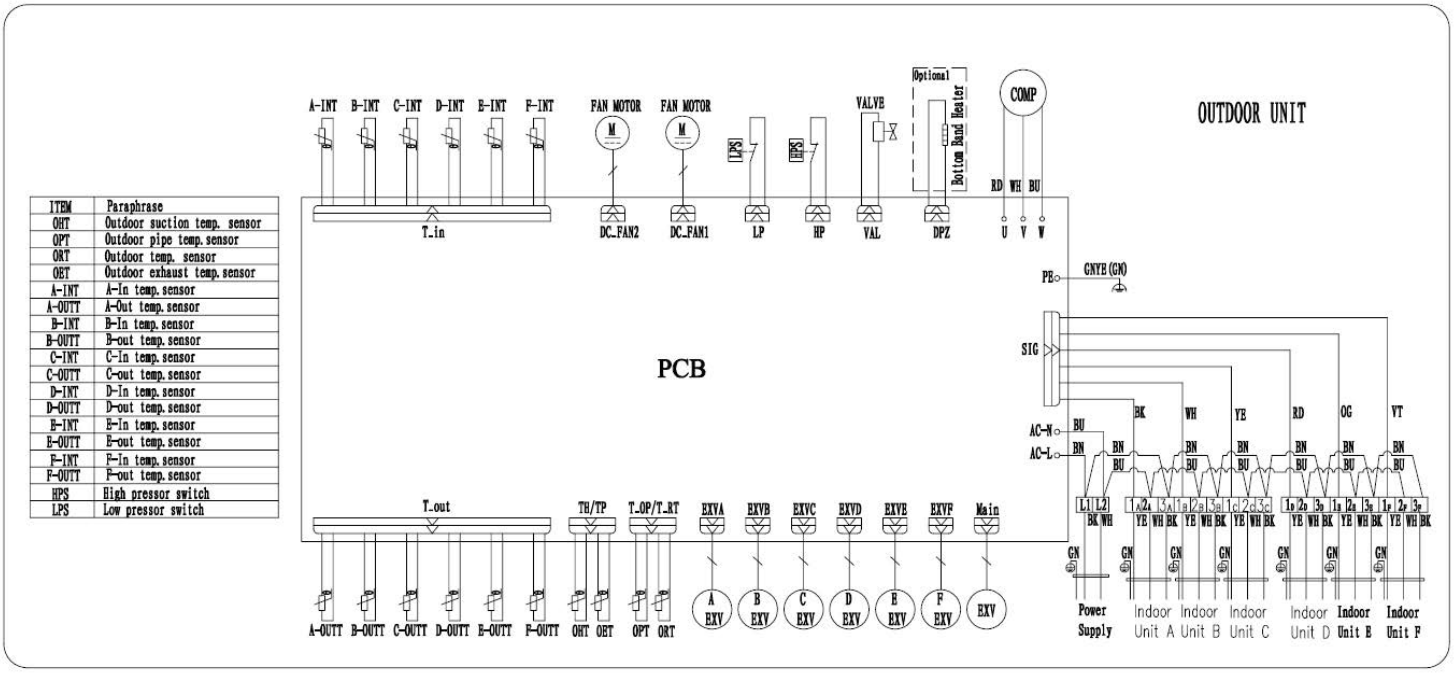

Control Board Wiring Diagrams 10

YN060GLSI24M6G

Control Board B

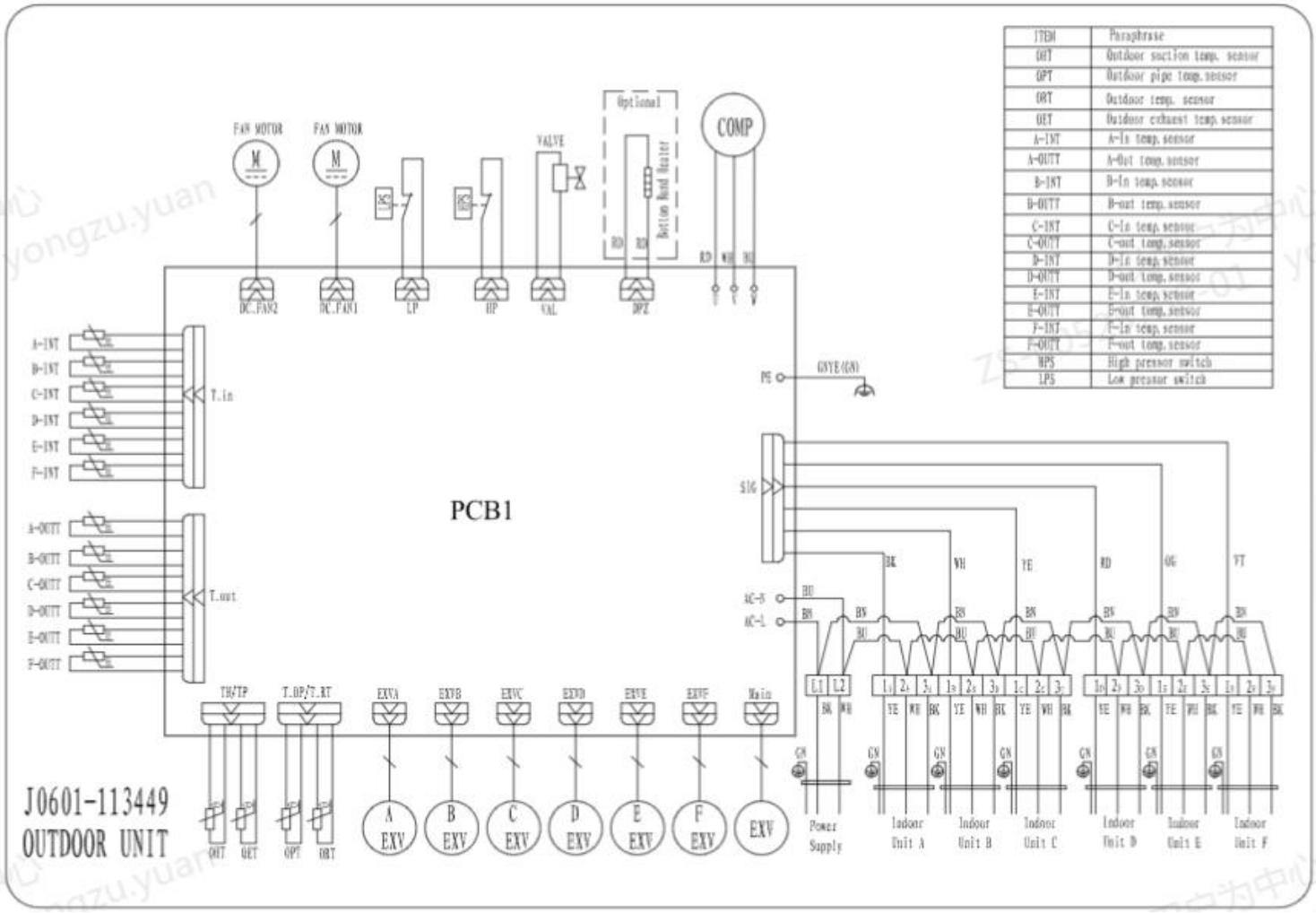

PCB Printed Diagrams

11

YN020GLSI24M2G, YN030GLSI24M3G, YN040GLSI24M4G

No.	Name
1	4-way Valve
2	Heater
3	L, N & Communication
4	Fuse
5	PCB Main Relay

No.	Name
6	DC and AC Motor Connector
7	Discharge Sensor Connector
8	OAT/OPT Sensor Connector
9	LED5
10	- - -

Top View

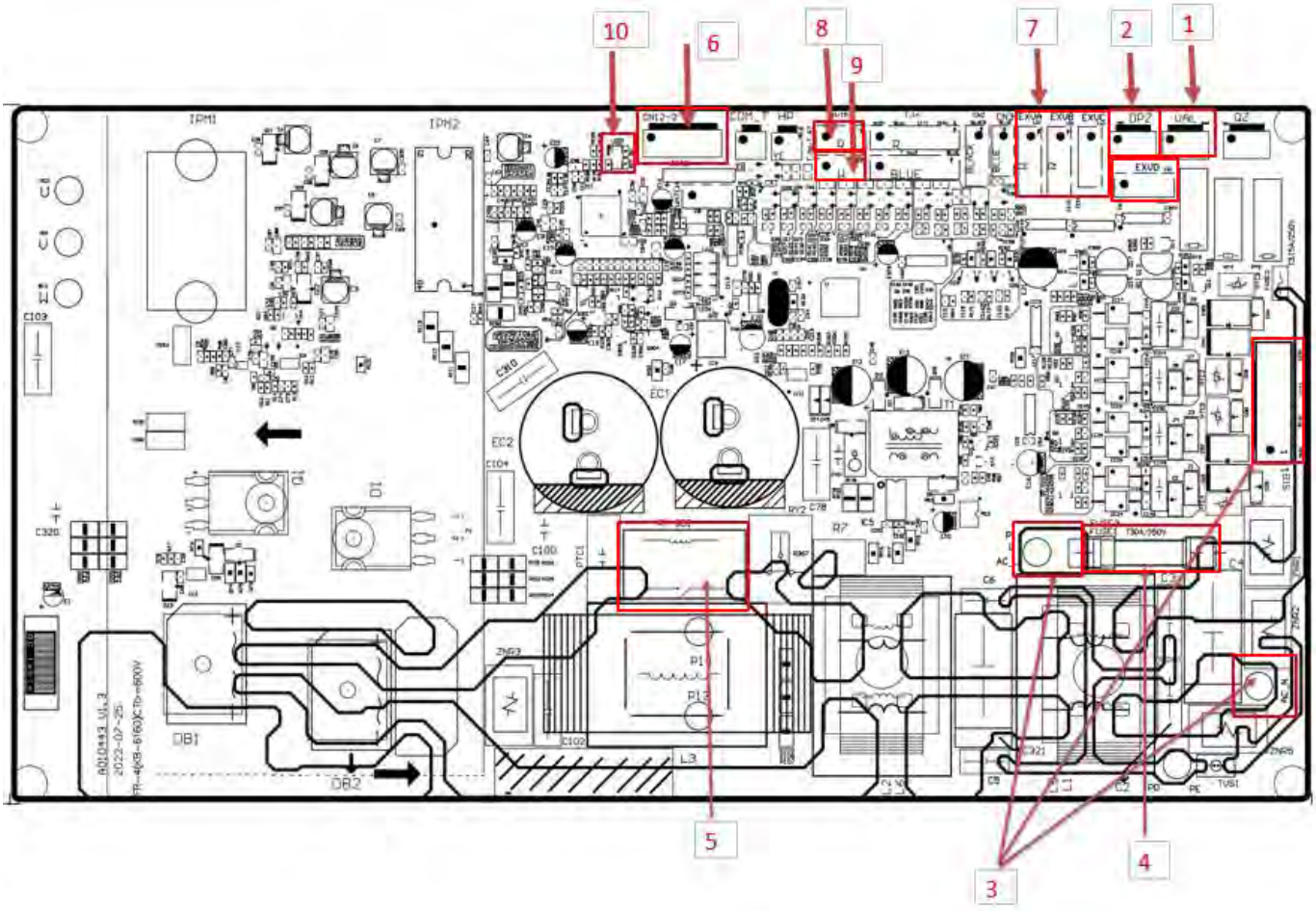

PCB Printed Diagrams

11

YN020GLSI24M2G, YN030GLSI24M3G, YN040GLSI24M4G

Bottom View

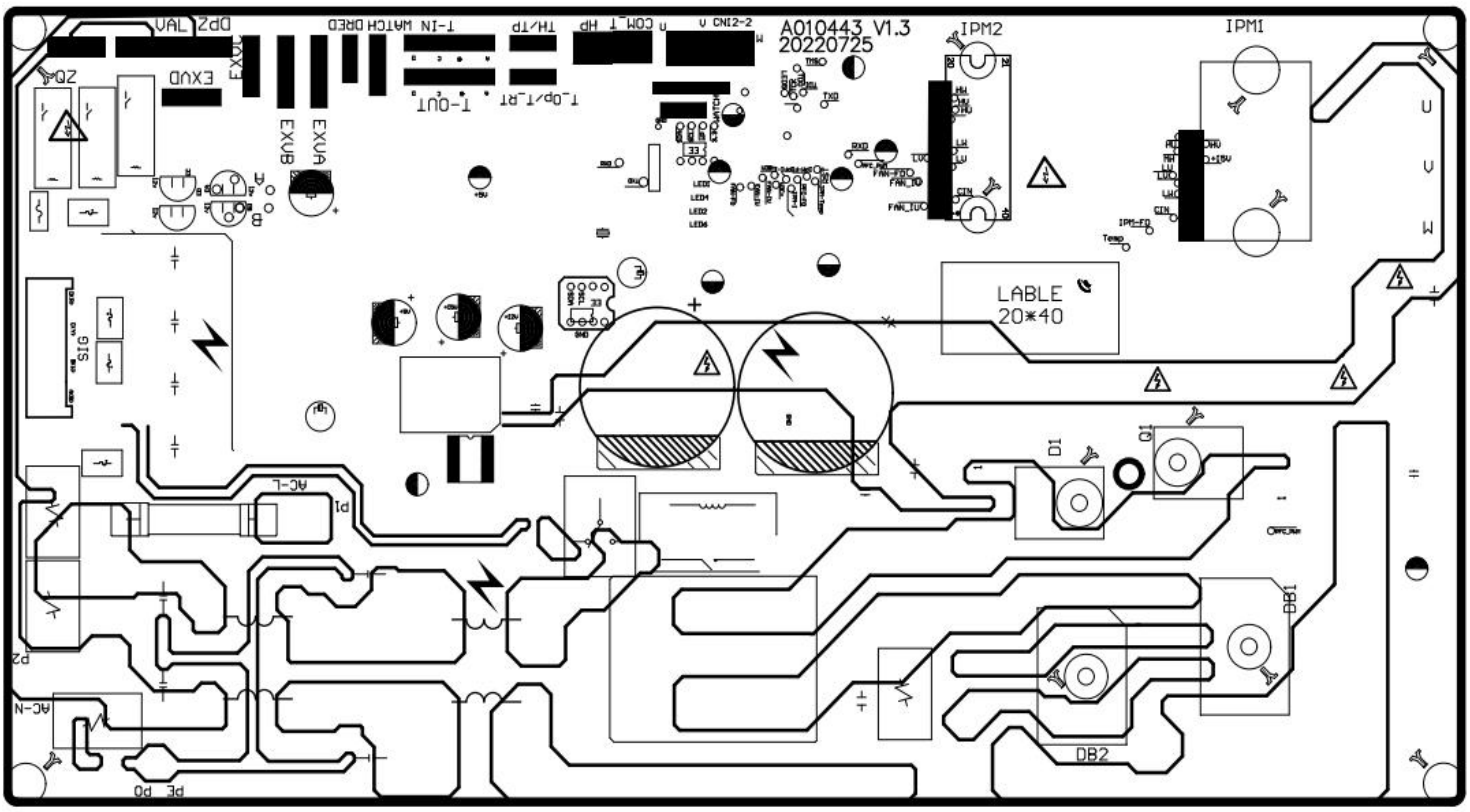

PCB Printed Diagrams

11

YN050GLSI24M5G

No.	Name
1	4-way Valve
2	Heater
3	L, N & Communication
4	Fuse
5	PCB Main Relay

No.	Name
6	DC and AC Motor Connector
7	Electronic Expansion Valve
8	Discharge Sensor Connector
9	OAT/OPT Sensor Connector
10	LED5

Top View

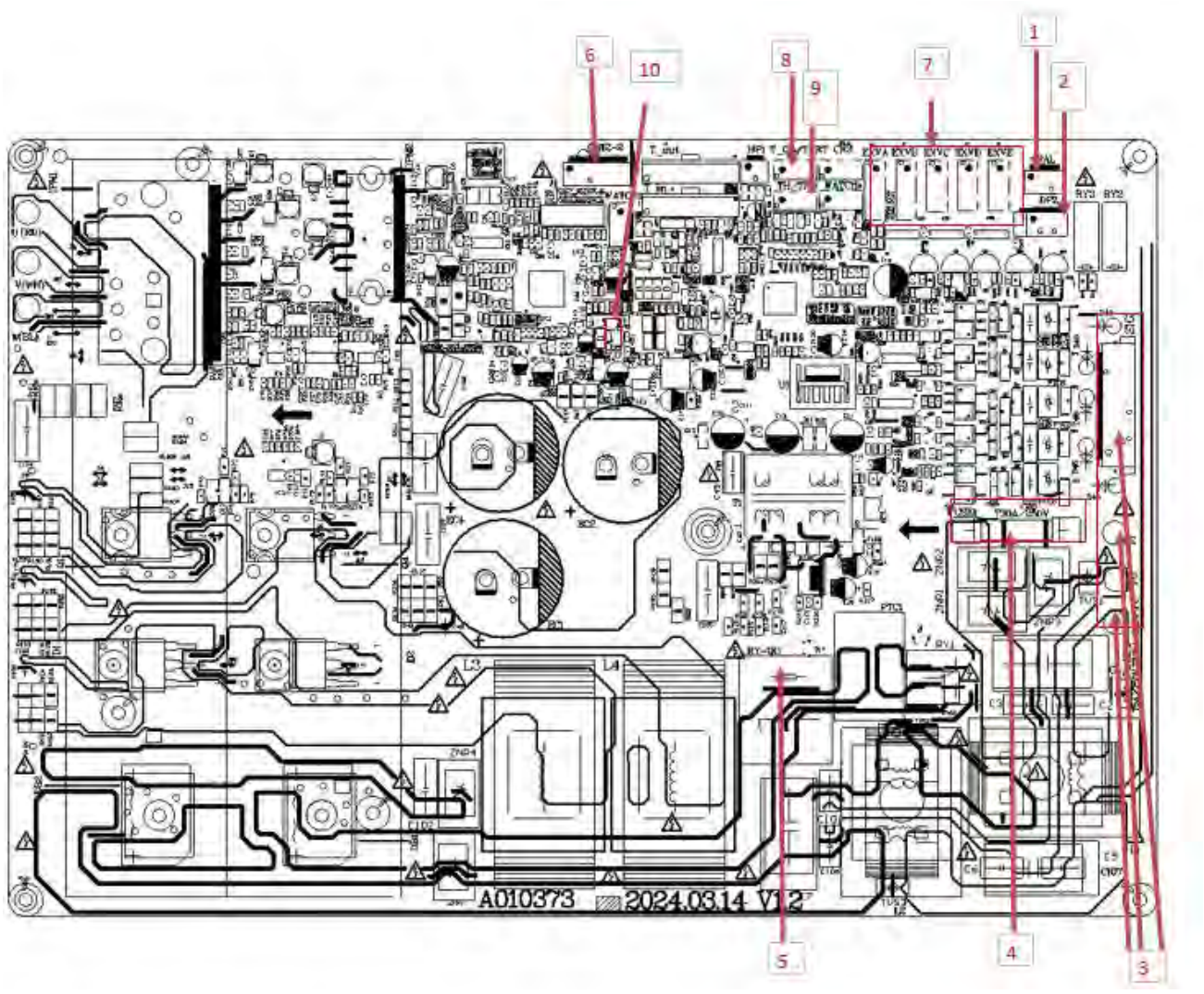

PCB Printed Diagrams

11

YN050GLSI24M5G

Bottom View

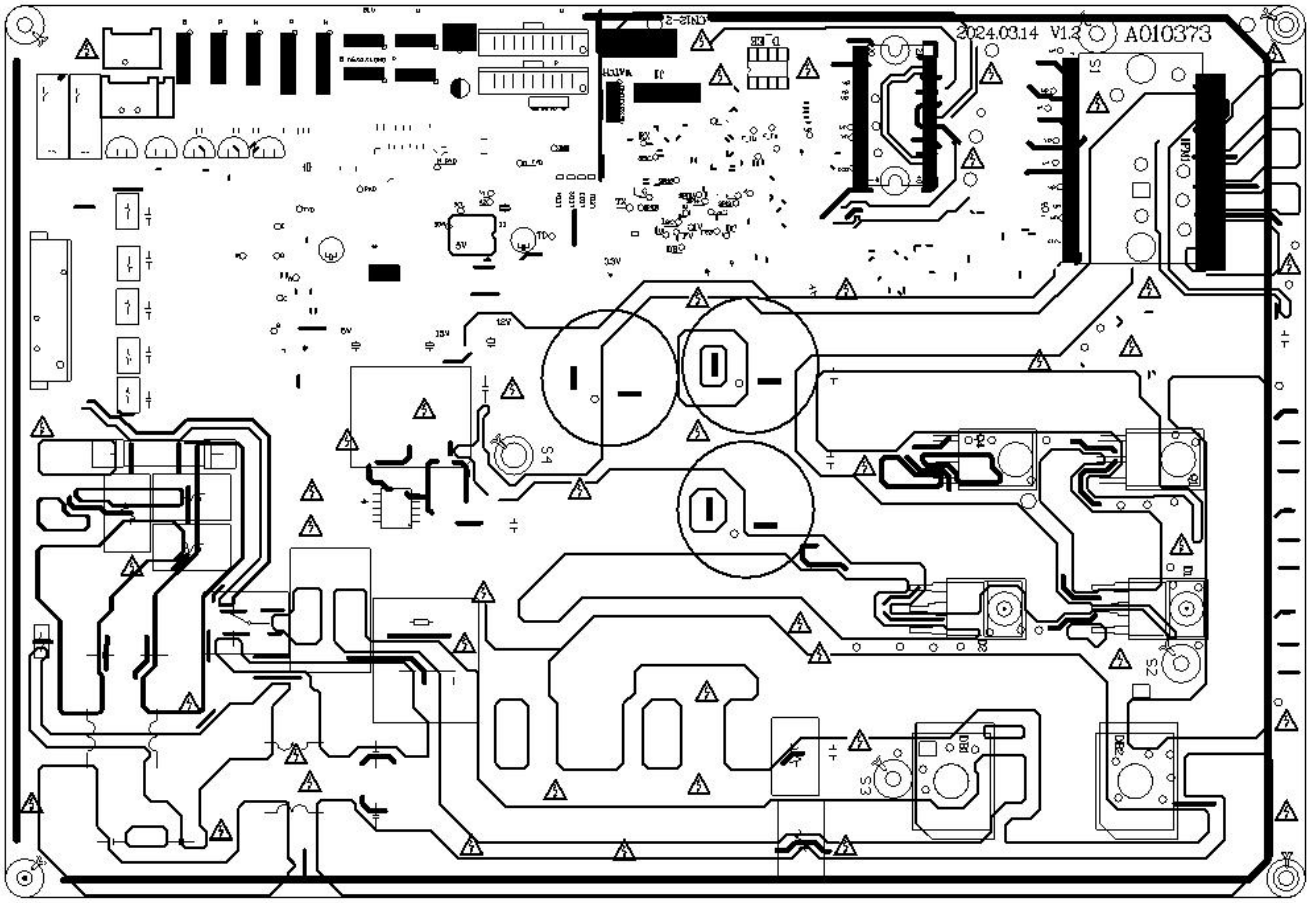

PCB Printed Diagrams

11

YN060GLSI24M6G

No.	Name
1	4-way Valve
2	Heater
3	L, N & Communication
4	Fuse
5	PCB Main Relay

No.	Name
6	DC and AC Motor Connector
7	Electronic Expansion Valve
8	Discharge Sensor Connector
9	OAT/OPT Sensor Connector
10	LED5

Top View

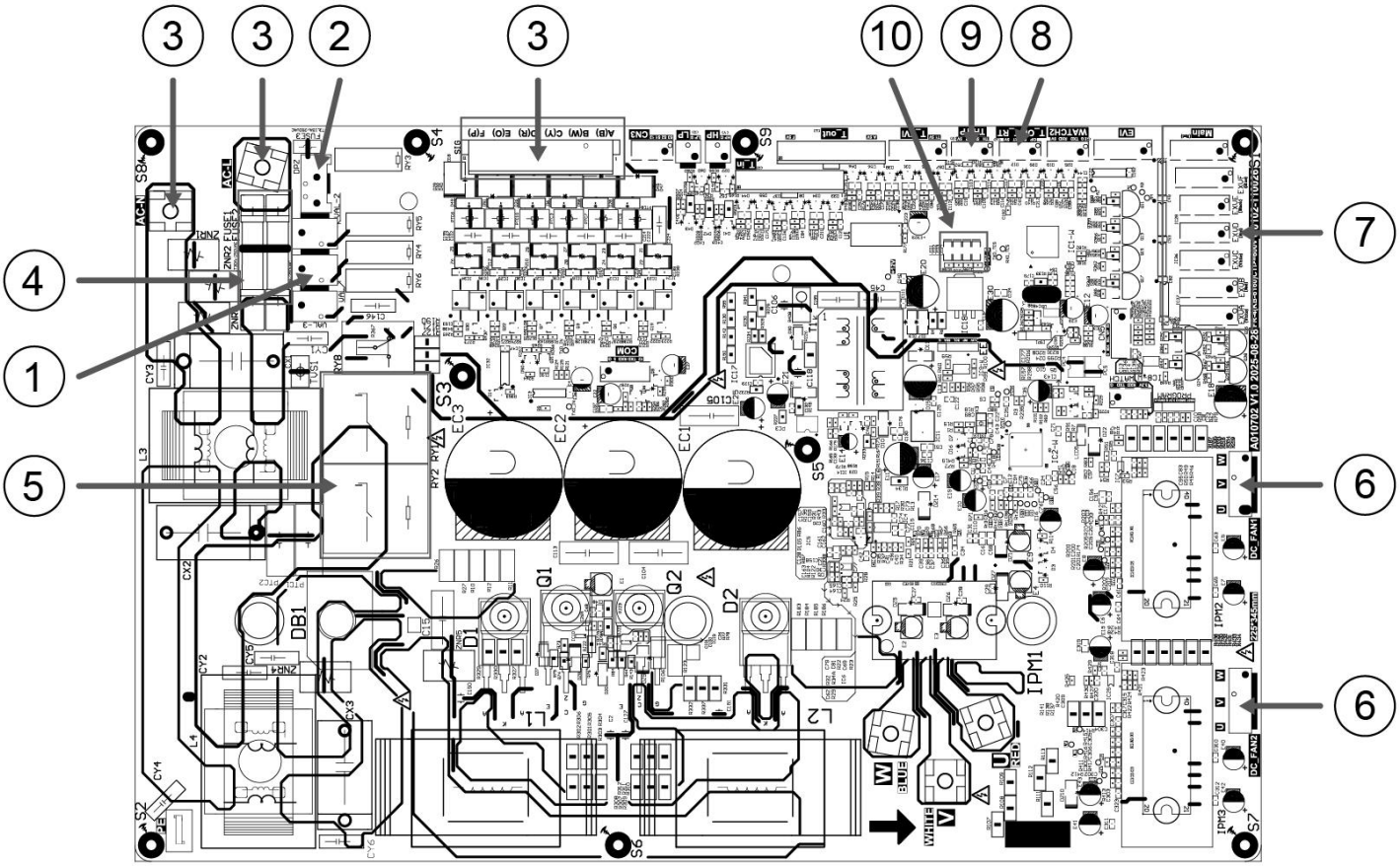

PCB Printed Diagrams

11

YN060GLSI24M6G

Bottom View

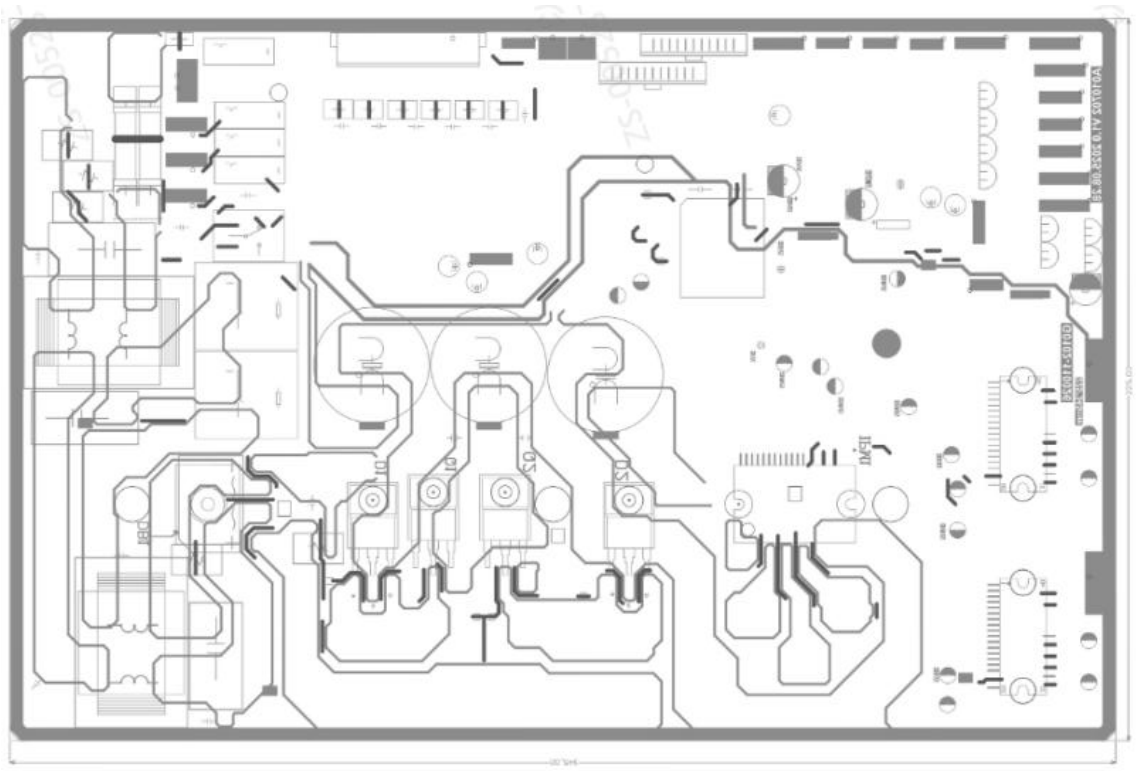

Schematic Diagram

12

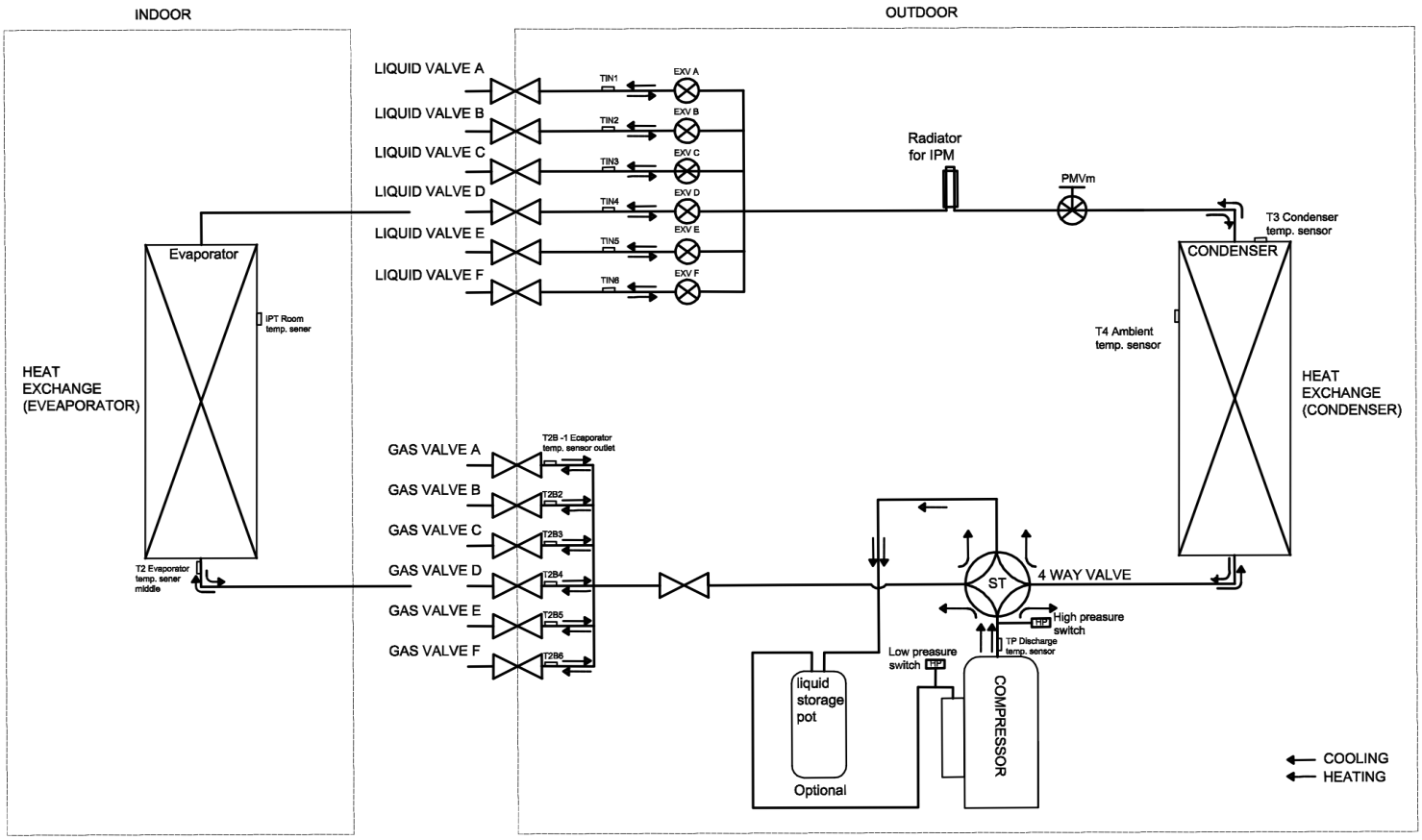

Temperature Characteristics 13

Indoor & Outdoor Exchange Temperature / Outside Air Temperature Sensor

Temp. °F(°C)	R min (k Ohm)	R(t) (k Ohm)	R max (k Ohm)	Temp. °F(°C)	R min (k Ohm)	R(t) (k Ohm)	R max (k Ohm)	Temp. °F(°C)	R min (k Ohm)	R(t) (k Ohm)	R max (k Ohm)
-22(-30)	60.343	64.104	68.080	70(21)	5.716	5.846	5.977	162(72)	0.974	1.010	1.047
-20(-29)	57.157	60.666	64.375	72(22)	5.498	5.620	5.742	163(73)	0.944	0.980	1.016
-18(-28)	54.139	57.413	60.870	73(23)	5.290	5.404	5.518	165(74)	0.917	0.952	0.988
-17(-27)	51.301	54.355	57.579	75(24)	5.091	5.198	5.305	167(75)	0.890	0.924	0.959
-15(-26)	48.630	51.480	54.487	77(25)	4.900	5.000	5.100	169(76)	0.864	0.897	0.931
-13(-25)	46.115	48.776	51.582	79(26)	4.713	4.811	4.909	171(77)	0.839	0.871	0.904
-11(-24)	43.748	46.232	48.850	81(27)	4.533	4.630	4.727	172(78)	0.814	0.846	0.879
-9(-23)	41.517	43.836	46.279	82(28)	4.362	4.457	4.552	174(79)	0.791	0.822	0.854
-8(-22)	39.415	41.581	43.861	84(29)	4.199	4.292	4.386	176(80)	0.769	0.799	0.830
-6(-21)	37.432	39.456	41.585	86(30)	4.042	4.133	4.225	178(81)	0.746	0.776	0.807
-4(-20)	35.581	37.473	39.462	88(31)	3.892	3.982	4.072	180(82)	0.725	0.754	0.784
-2(-19)	33.798	35.565	37.421	90(32)	3.748	3.836	3.925	181(83)	0.705	0.733	0.762
0(-18)	32.134	33.785	35.519	91(33)	3.611	3.697	3.784	183(84)	0.685	0.713	0.742
1(-17)	30.561	32.105	33.725	93(34)	3.479	3.564	3.649	185(85)	0.666	0.693	0.721
3(-16)	29.077	30.520	32.033	95(35)	3.353	3.436	3.520	187(86)	0.647	0.674	0.701
5(-15)	27.673	29.023	30.437	97(36)	3.232	3.313	3.395	189(87)	0.629	0.655	0.682
7(-14)	26.347	27.609	28.931	99(37)	3.116	3.195	3.275	190(88)	0.613	0.638	0.664
9(-13)	25.092	26.273	27.508	100(38)	3.004	3.082	3.161	192(89)	0.595	0.620	0.646
10(-12)	23.905	25.010	26.165	102(39)	2.898	2.974	3.051	194(90)	0.580	0.604	0.629
12(-11)	22.782	23.816	24.896	104(40)	2.795	2.870	2.946	196(91)	0.563	0.587	0.611
14(-10)	21.720	22.687	23.697	106(41)	2.697	2.770	2.844	198(92)	0.549	0.572	0.596
16(-9)	20.713	21.618	22.562	108(42)	2.604	2.675	2.748	199(93)	0.534	0.557	0.580
18(-8)	19.759	20.607	21.490	109(43)	2.513	2.583	2.654	201(94)	0.520	0.542	0.565
19(-7)	18.855	19.649	20.475	111(44)	2.426	2.494	2.564	203(95)	0.506	0.528	0.550
21(-6)	17.999	18.742	19.515	113(45)	2.343	2.410	2.478	205(96)	0.493	0.514	0.536
23(-5)	17.187	17.883	18.606	115(46)	2.263	2.328	2.395	207(97)	0.480	0.501	0.522
25(-4)	16.416	17.068	17.745	117(47)	2.186	2.250	2.315	208(98)	0.468	0.488	0.509
27(-3)	15.685	16.296	16.930	118(48)	2.111	2.174	2.238	210(99)	0.456	0.476	0.497
28(-2)	14.991	15.563	16.156	120(49)	2.041	2.102	2.164	212(100)	0.444	0.464	0.484
30(-1)	14.332	14.868	15.423	122(50)	1.972	2.032	2.093	214(101)	0.433	0.452	0.472

Temperature Characteristics 13

Temp. °F(°C)	R min (k Ohm)	R(t) (k Ohm)	R max (k Ohm)	Temp. °F(°C)	R min (k Ohm)	R(t) (k Ohm)	R max (k Ohm)	Temp. °F(°C)	R min (k Ohm)	R(t) (k Ohm)	R max (k Ohm)
32(0)	13.766	14.270	14.792	124(51)	1.906	1.965	2.025	216(102)	0.422	0.441	0.460
34(1)	13.111	13.582	14.069	126(52)	1.844	1.901	1.959	217(103)	0.412	0.430	0.449
36(2)	12.546	12.987	13.443	127(53)	1.783	1.839	1.896	219(104)	0.401	0.419	0.437
37(3)	12.008	12.422	12.849	129(54)	1.724	1.779	1.835	221(105)	0.391	0.409	0.427
39(4)	11.497	11.885	12.284	131(55)	1.668	1.721	1.776	223(106)	0.381	0.399	0.416
41(5)	11.012	11.375	11.749	133(56)	1.614	1.666	1.719	225(107)	0.372	0.388	0.406
43(6)	10.548	10.889	11.239	135(57)	1.562	1.613	1.665	226(108)	0.362	0.379	0.395
45(7)	10.109	10.428	10.756	136(58)	1.512	1.562	1.613	228(109)	0.353	0.369	0.386
46(8)	9.689	9.988	10.295	138(59)	1.463	1.512	1.562	230(110)	0.344	0.360	0.376
48(9)	9.289	9.570	9.858	140(60)	1.417	1.465	1.514	232(111)	0.335	0.351	0.367
50(10)	8.909	9.172	9.441	142(61)	1.372	1.419	1.467	234(112)	0.327	0.342	0.357
52(11)	8.545	8.792	9.044	144(62)	1.328	1.374	1.421	235(113)	0.319	0.333	0.349
54(12)	8.199	8.431	8.667	145(63)	1.287	1.332	1.378	237(114)	0.311	0.325	0.340
55(13)	7.870	8.087	8.308	147(64)	1.247	1.291	1.336	239(115)	0.303	0.317	0.332
57(14)	7.554	7.758	7.965	149(65)	1.208	1.251	1.295	241(116)	0.296	0.309	0.324
59(15)	7.254	7.445	7.639	151(66)	1.171	1.213	1.256	243(117)	0.288	0.302	0.315
61(16)	6.968	7.147	7.329	153(67)	1.135	1.176	1.218	244(118)	0.281	0.294	0.308
63(17)	6.694	6.862	7.032	154(68)	1.100	1.140	1.181	246(119)	0.274	0.287	0.301
64(18)	6.433	6.590	6.749	156(69)	1.067	1.106	1.146	248(120)	0.268	0.280	0.293
66(19)	6.183	6.331	6.480	158(70)	1.035	1.073	1.112				
68(20)	5.945	6.083	6.223	160(71)	1.004	1.041	1.079				

Resistance at 77°F(25°C): Wall split type 5 kΩ; Cassette and Duct 10 kΩ.

TH1: Indoor room temperature sensor and outside air temperature sensor
TH2: Indoor exchange temperature sensor and outside exchange temperature sensor
TH4: Outdoor exchange temperature sensor and outside exchange temperature sensor
TH5: Outdoor ambient temperature sensor and outside exchange temperature sensor

Before measuring the resistance, disconnect the connectors.

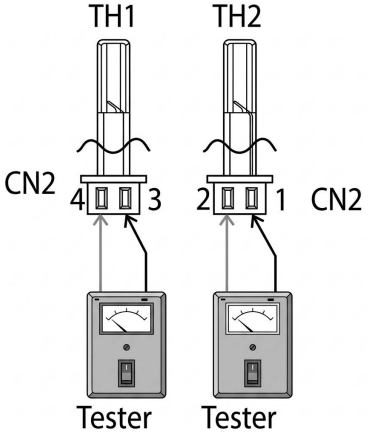

Temperature Characteristics 13

Outdoor Unit Discharge Sensor Temperature Characteristics

Temp. °F(°C)	R min (k Ohm)	R(t) (k Ohm)	R max (k Ohm)	Temp. °F(°C)	R min (k Ohm)	R(t) (k Ohm)	R max (k Ohm)	Temp. °F(°C)	R min (k Ohm)	R(t) (k Ohm)	R max (k Ohm)
-22(-30)	288.879	337.780	386.68	73(23)	20.114	21.847	23.579	169(76)	2.733	2.835	2.937
-20(-29)	272.641	318.219	263.797	75(24)	19.263	20.900	22.538	171(77)	2.646	2.742	2.839
-18(-28)	257.401	299.897	342.392	77(25)	18.453	20.000	21.547	172(78)	2.561	2.653	2.745
-17(-27)	243.09*2	282.727	322.363	79(26)	17.681	19.143	20.605	174(79)	2.480	2.567	2.654
-15(-26)	299.654	266.633	303.613	81(27)	16.945	18.327	19.710	176(80)	2.401	2.484	2.567
-13(-25)	217.028	251.541	286.054	82(28)	16.243	17.551	18.858	178(81)	2.326	2.404	2.483
-11(-24)	205.162	237.383	269.604	84(29)	15.575	16.811	18.047	180(82)	2.183	2.253	2.324
-9(-23)	194.005	224.097	254.188	86(30)	14.937	16.106	17.275	181(83)	2.183	2.253	2.324
-8(-22)	183.513	211.625	239.736	88(31)	14.328	15.434	16.541	183(84)	2.115	2.182	2.249
-6(-21)	173.642	199.912	226.181	90(32)	13.748	14.794	15.841	185(85)	2.050	2.113	2.176
-4(-20)	164.353	188.909	213.465	91(33)	13.194	14.184	15.175	187(86)	1.984	2.047	2.109
-2(-19)	155.608	178.569	201.530	93(34)	12.665	13.602	14.540	189(87)	1.921	1.983	2.045
0(-18)	147.373	168.850	190.326	95(35)	12.160	13.048	13.935	190(88)	1.860	1.921	1.982
1(-17)	139.616	159.710	179.803	97(36)	11.678	12.518	13.358	192(89)	1.801	1.862	1.922
3(-16)	132.307	151.112	169.917	99(37)	11.217	12.013	12.809	194(90)	1.744	1.804	1.864
5(-15)	125.417	143.022	160.627	100(38)	10.777	11.531	12.248	196(91)	1.690	1.749	1.808
7(-14)	118.921	135.407	151.893	102(39)	10.357	11.071	11.784	198(92)	1.637	1.695	1.754
9(-13)	112.794	128.236	143.679	104(40)	9.955	10.631	11.307	199(93)	1.586	1.644	1.701
10(-12)	107.014	121.483	135.952	106(41)	9.571	10.211	10.852	201(94)	1.537	1.594	1.651
12(-11)	101.559	115.120	128.680	108(42)	9.203	9.810	10.417	203(95)	1.490	1.546	1.602
14(-10)	96.410	109.123	121.836	109(43)	8.852	9.427	10.002	205(96)	1.444	1.500	1.555
16(-9)	91.548	103.469	115.391	111(44)	8.516	9.061	9.606	207(97)	1.400	1.455	1.509
18(-8)	86.956	98.138	109.320	113(45)	8.194	8.711	9.228	208(98)	1.358	1.412	1.465
19(-7)	82.617	93.108	103.600	115(46)	7.886	8.376	8.866	210(99)	1.317	1.370	1.423
21(-6)	78.516	88.362	98.209	117(47)	7.591	8.056	8.520	212(100)	1.277	1.329	1.382
23(-5)	74.640	83.883	93.126	118(48)	7.309	7.750	8.190	214(101)	1.239	1.290	1.342
25(-4)	70.974	79.653	88.332	120(49)	7.039	7.750	8.190	216(102)	1.202	1.253	1.303
27(-3)	67.507	75.659	83.810	122(50)	6.780	7.176	7.572	217(103)	1.166	1.216	1.266
28(-2)	64.227	71.885	79.543	124(51)	6.532	6.908	7.283	219(104)	1.132	1.181	1.230
30(-1)	61.123	68.319	75.515	126(52)	6.294	6.650	7.007	221(105)	1.099	1.147	1.195

Temperature Characteristics 13

Temp. °F(°C)	R min (k Ohm)	R(t) (k Ohm)	R max (k Ohm)	Temp. °F(°C)	R min (k Ohm)	R(t) (k Ohm)	R max (k Ohm)	Temp. °F(°C)	R min (k Ohm)	R(t) (k Ohm)	R max (k Ohm)
32(0)	58.184	64.948	71.712	127(53)	6.066	6.404	6.743	223(106)	1.066	1.114	1.162
34(1)	55.402	61.761	68.120	129(54)	5.847	6.168	6.489	225(107)	1.035	1.082	1.129
36(2)	52.766	58.746	64.726	131(55)	5.638	5.942	6.247	226(108)	1.005	1.051	1.098
37(3)	50.269	55.894	61.519	133(56)	5.437	5.726	6.015	228(109)	0.976	1.022	1.067
39(4)	47.903	53.195	58.488	135(57)	5.244	5.518	5.793	230(110)	0.948	0.993	1.038
41(5)	45.661	50.641	55.621	136(58)	5.059	5.319	5.580	232(111)	0.921	0.965	1.009
43(6)	43.543	48.222	52.910	138(59)	4.882	5.129	5.376	234(112)	0.895	0.938	0.981
45(7)	41.517	45.931	50.345	140(60)	4.711	4.946	5.180	235(113)	0.869	0.912	0.955
46(8)	39.604	43.761	47.917	142(61)	4.548	4.770	4.993	237(114)	0.845	0.887	0.929
48(9)	37.789	41.704	45.619	144(62)	4.39	4.602	4.813	239(115)	0.821	0.862	0.904
50(10)	36.066	39.755	43.443	145(63)	4.240	4.440	4.641	241(116)	0.798	0.839	0.879
52(11)	34.431	37.907	41.383	147(64)	4.094	4.285	4.475	243(117)	0.776	0.816	0.856
54(12)	32.787	36.154	39.430	149(65)	3.955	4.136	4.317	244(118)	0.754	0.794	0.833
55(13)	31.403	34.491	37.580	151(66)	3.821	3.993	4.164	246(119)	0.733	0.772	0.811
57(14)	30.001	32.914	35.826	153(67)	3.693	3.855	4.018	248(120)	0.713	0.751	0.789
59(15)	28.670	31.417	34.163	154(68)	3.569	3.723	3.878	250(121)	0.694	0.731	0.769
61(16)	27.404	29.995	32.586	156(69)	3.450	3.596	3.743	252(122)	0.675	0.712	0.749
63(17)	26.200	28.645	31.090	158(70)	3.335	3.475	3.614	253(123)	0.657	0.693	0.729
64(18)	25.056	27.363	29.671	160(71)	3.225	3.357	3.490	255(124)	0.639	0.675	0.710
66(19)	23.967	26.145	28.324	162(72)	3.119	3.245	3.370	257(125)	0.622	0.657	0.692
68(20)	22.931	24.988	27.044	163(73)	3.017	3.136	3.225				
70(21)	21.946	23.888	25.830	165(74)	2.919	3.032	3.145				
72(22)	21.007	22.842	24.676	167(75)	2.824	2.932	3.093				

R—Resistance

Resistance at 77°F(25°C): 20 kΩ

TH3: Outdoor unit discharge pipe sensor

Before measuring the resistance, disconnect the connectors as shown above.

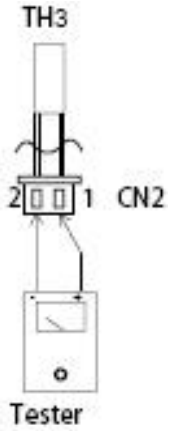

The design and specifications of this product are subject to change without prior notice as development continues. Consult with the sales agency or manufacturer for details. Refer to the equipment nameplate for all other applicable specifications.

PIONEER®

is a registered trademark of Parker Davis HVAC International, LLC.

Parker Davis HVAC International
7290 NW 77 Court, Miami, FL 33166 - USA
Tel : (305) 513-4488
Fax : (305) 513-4499
E-mail : info@pdhvac.com
Website: www.pdhvac.com

Pioneer product line, parts, and supplies are available online for convenient ordering at:
www.highseer.com
www.pioneerminisplit.com

Scan the below code to visit our support page where you can find more installation materials:

SCAN ME

Copyright © Parker Davis HVAC International, LLC. All rights reserved.