Job Name:	
Submitted By:	

Submittal Sheet For: YN050GLSI24M5G / (5x) WT0xxGLSI24HLG

Date _____

Ref. _____

Quint (5) Circuit Ductless Inverter Heat Pump Set

System Full Set Model: **YN050GLSI24M5G**

AHRI Reference Number: **217048771**

Cooling Mode Performance

Rated Cooling	42,000 BTU/hr
Ambient Range	5~131°F
SEER2 Rating	22.0 BTU/W·h
EER2 Rating	11.2 BTU/W·h

* 100% Capacity @ Indoor DB 80°F / WB 67°F

Heating Mode Performance

Rated Heating	42,000 BTU/hr
Ambient Range	-13~86°F
HSPF2 IV (V)	10.0 (7.8) BTU/W·h
COP2 (47°F)	3.5 W/W

Heating (17°F) = 31,000 BTU / Heating (5°F) = 30,000 BTU / COP2 (5°F) = 2.0 W/W



Wall-Mounted Indoor Unit



Outdoor Condensing Unit



User-Selected Installation Kit



Handheld Remote Controller

Electrical Information

Rated Input (W)	Cooling	Heating
	3,550	3,260
Rated Current (A)	15.9	14.6
Breaker Needed	45A (Double-Pole)	
Power Supply	**208~230V, 60Hz, 1Ph**	

Piping and Refrigerant

Liquid Line (OD)	1/4 in (5)
Suction Line (OD)	3/8 in (5)
Refrigerant Precharge	R-454b (10 - 25 ft.)
Vertical Run/Elevation Diff.	50 ft. / 33 ft.

This combination is Energy-Star certified.

ENERGY STAR

Exterior Unit (Condenser) Specifications

Sound Level (dBA)	65
Recommended Room Size	1,000~1,600 Sq. ft.
Minimum Room Size	135 Sq. ft.
Compressor	Twin-Rotary
Dimensions (WDH)	42-1/4 in x 18-3/8 in x 33-1/2 in
Weight (lbs)	174.2

Compatible Indoor Air Handler Units

WT009GLSI24HLG (9K)	WT012GLSI24HLG (12K)
WT018GLSI24HLG (18K)	WT024GLSI24HLG (24K)
Quantity	5 (Up to 60,000 BTU)
Max Circuit Length	80 ft. (9K) / 100 ft. (12K/18K/24K)
Max Vertical Run	33 ft. (9K/12K/18K/24K)
Adjustment Charge	0.11 oz x (L1+L2+L3+L4+L5-125 ft.)

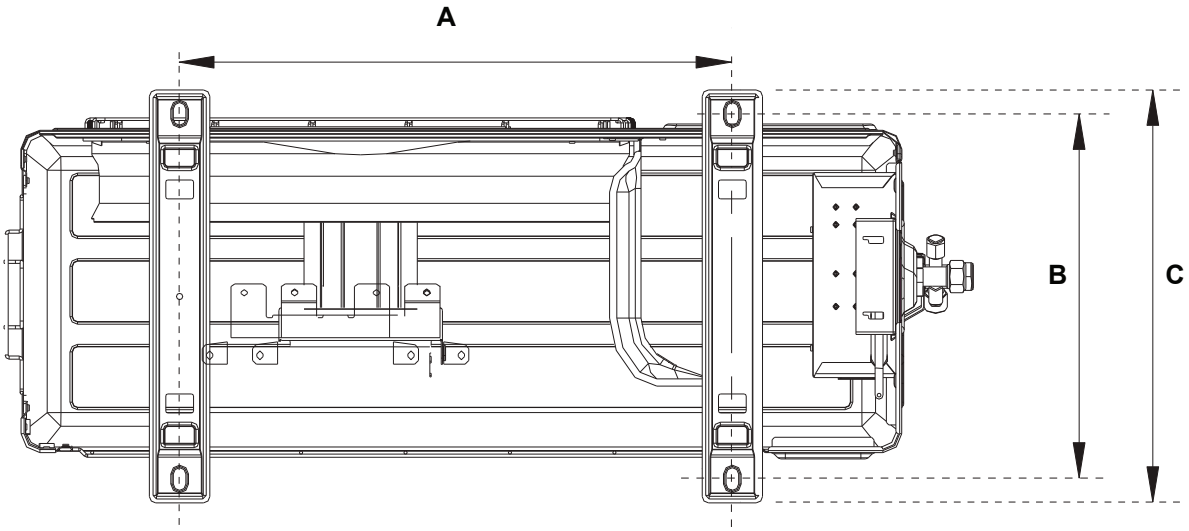

Model	A	B	C	D	E
YN050GLSI24M5G (42,000 BTU / 5-Zone)	26 in	18-1/4 in	18-3/8 in	42-1/4 in	33-5/8 in
	660 mm	462 mm	468 mm	1,074 mm	853 mm

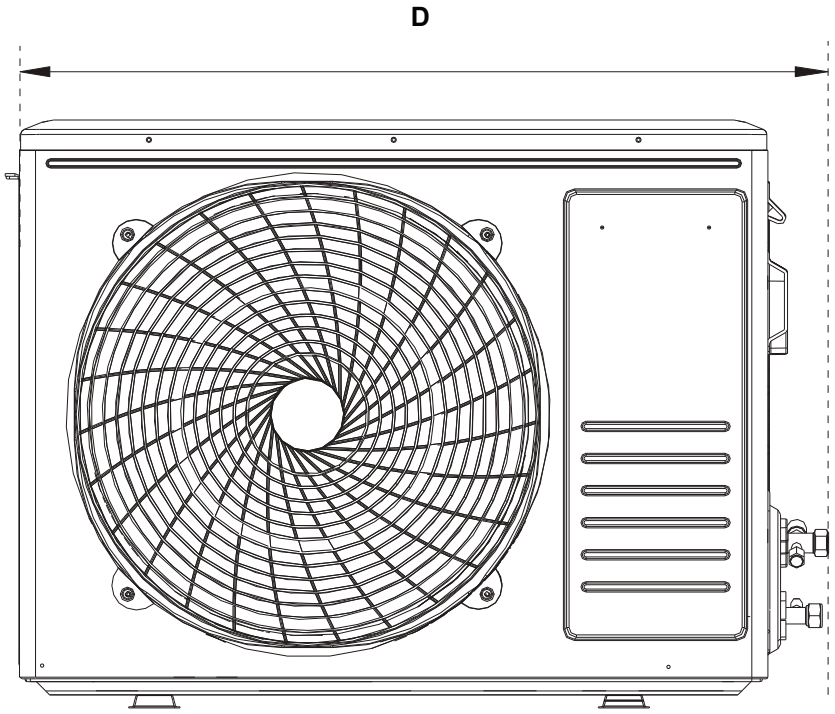

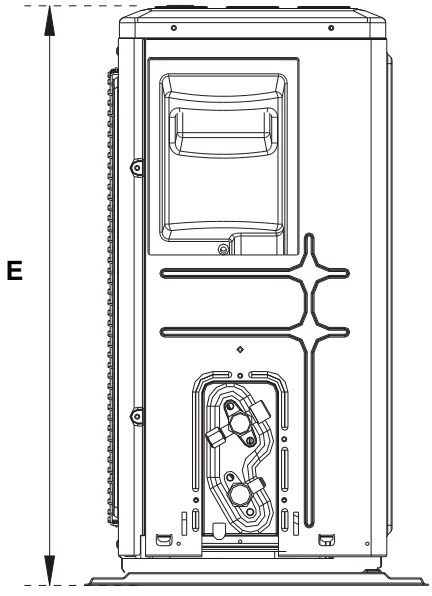

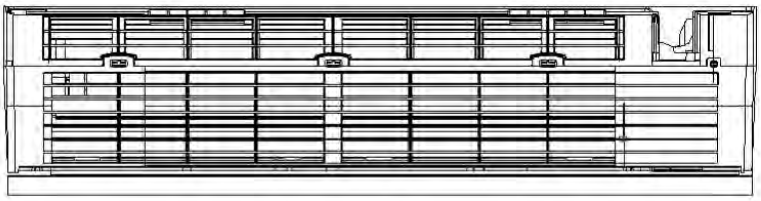

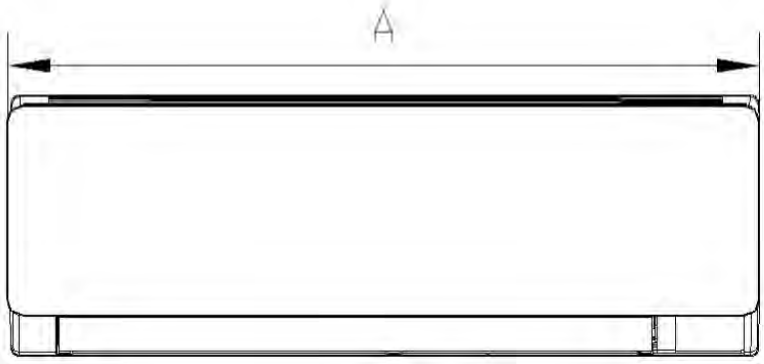

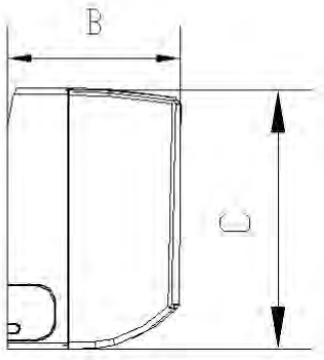

Model	A	B	C
WT009GLSI24HLG	32-1/4 in	7-3/4 in	12 in
	820 mm	195.3 mm	304.8 mm

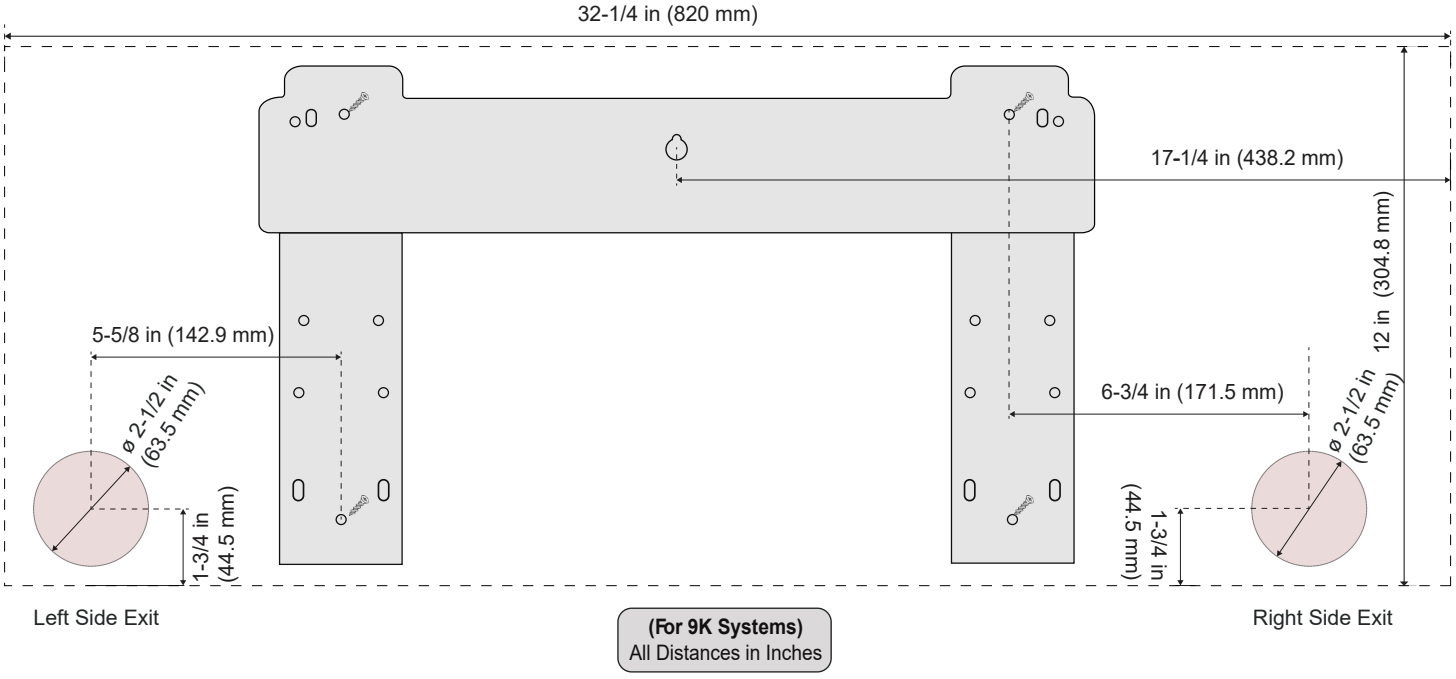

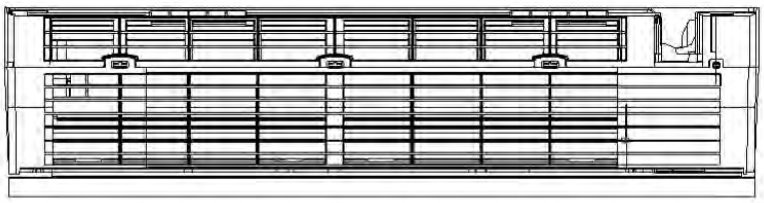

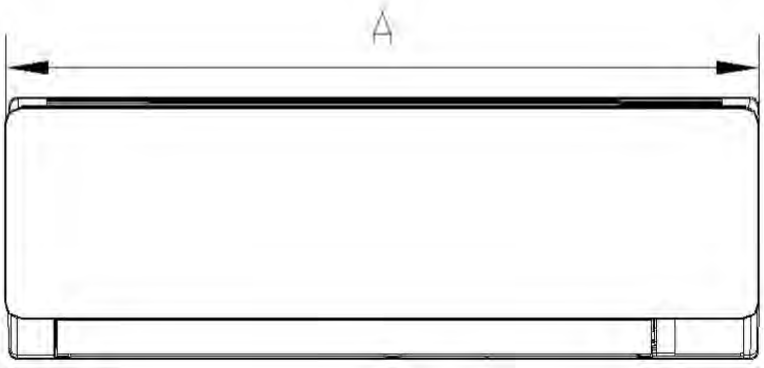

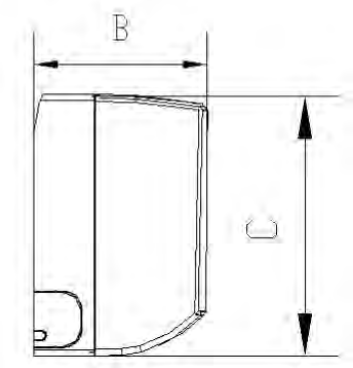

Model	A	B	C
WT012GLSI24HLG	36-1/4 in	7-3/4 in	12 in
	920 mm	195.3 mm	304.8 mm

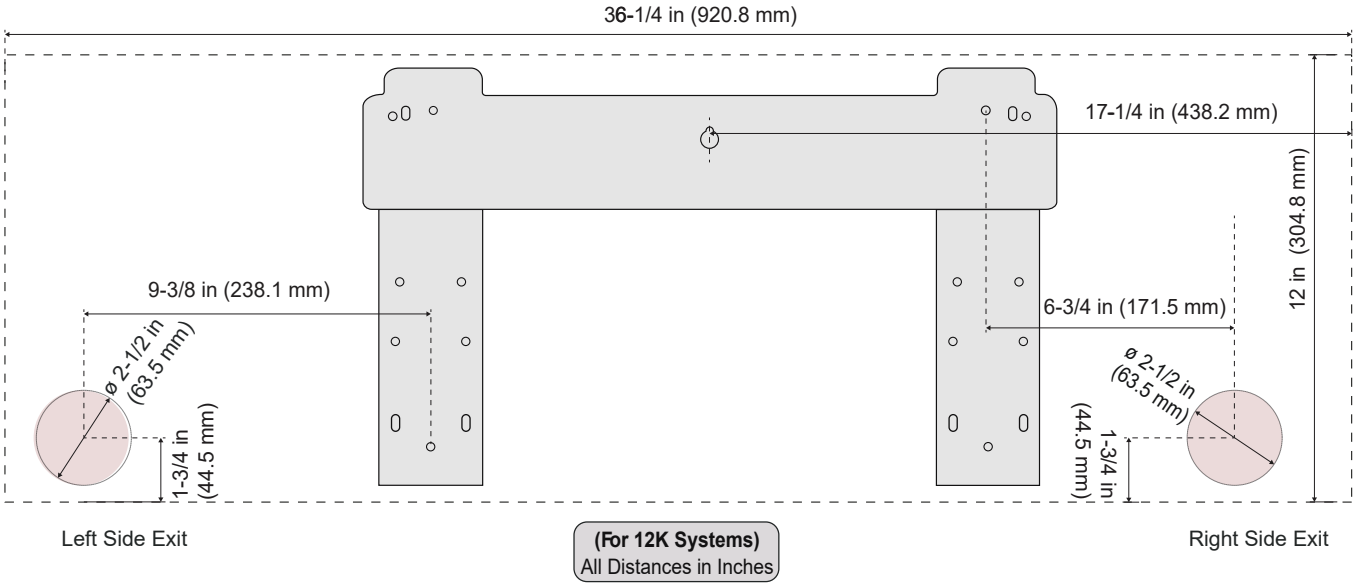

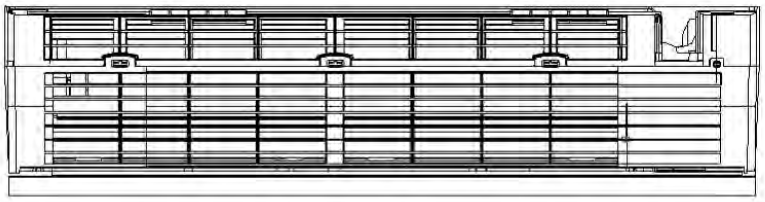

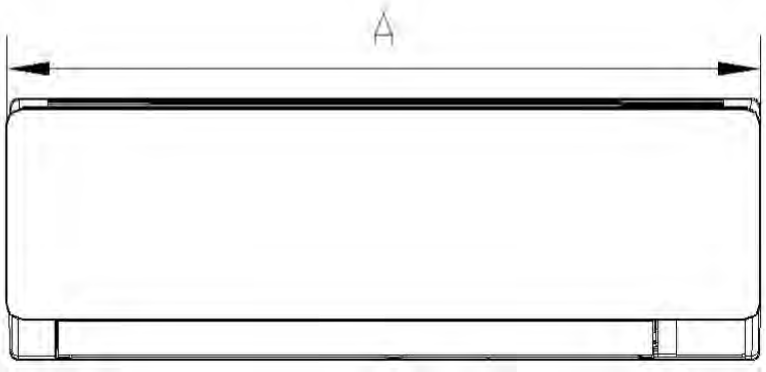

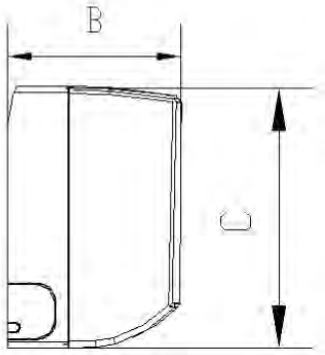

Model	A	B	C
WT018GLSI24HLG	43-1/4 in	8-3/4 in	13-1/8 in
	1,097 mm	222 mm	331.8 mm

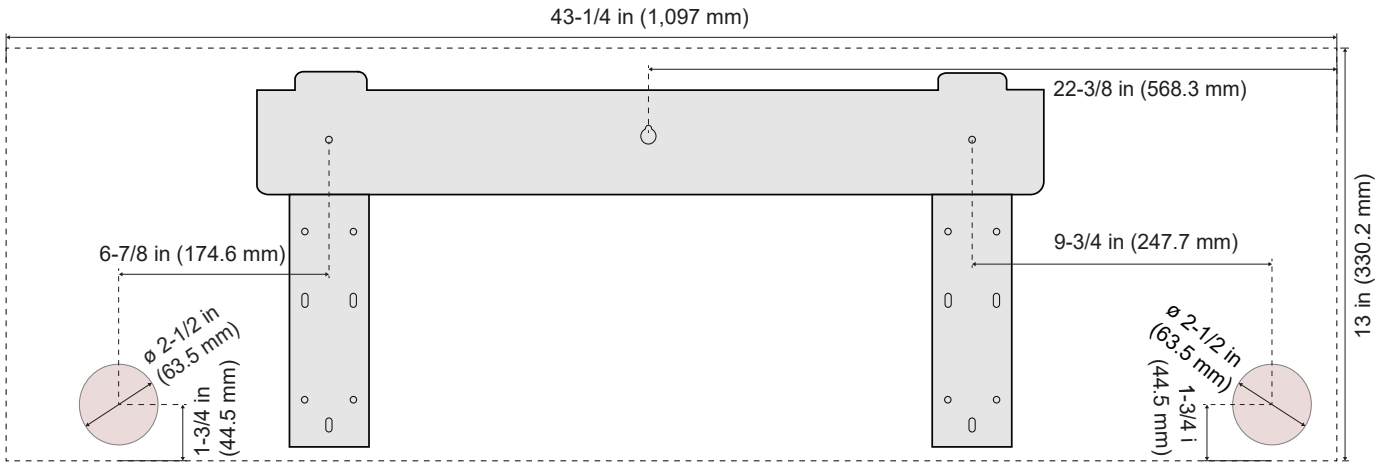

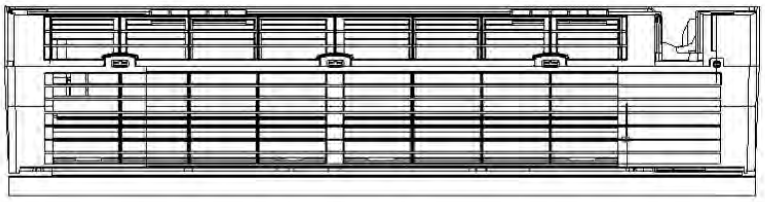

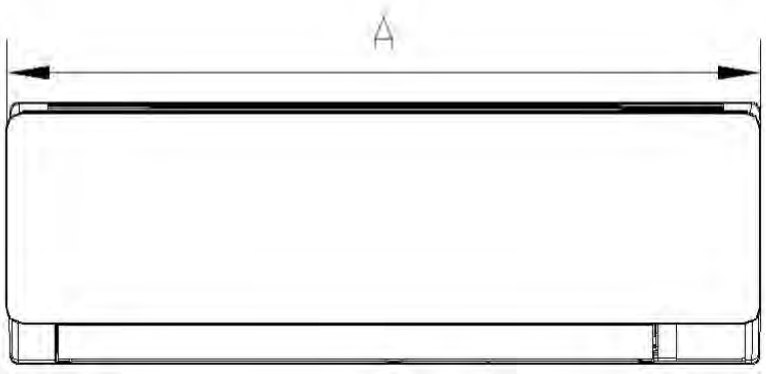

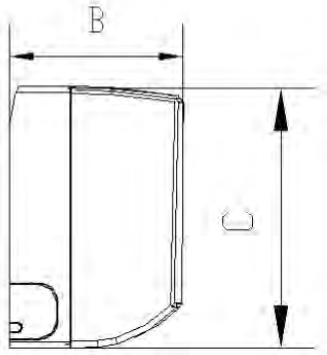

Model	A	B	C
WT024GLSI24HLG	43-1/4 in	8-3/4 in	13-1/8 in
	1,097 mm	222 mm	331.8 mm

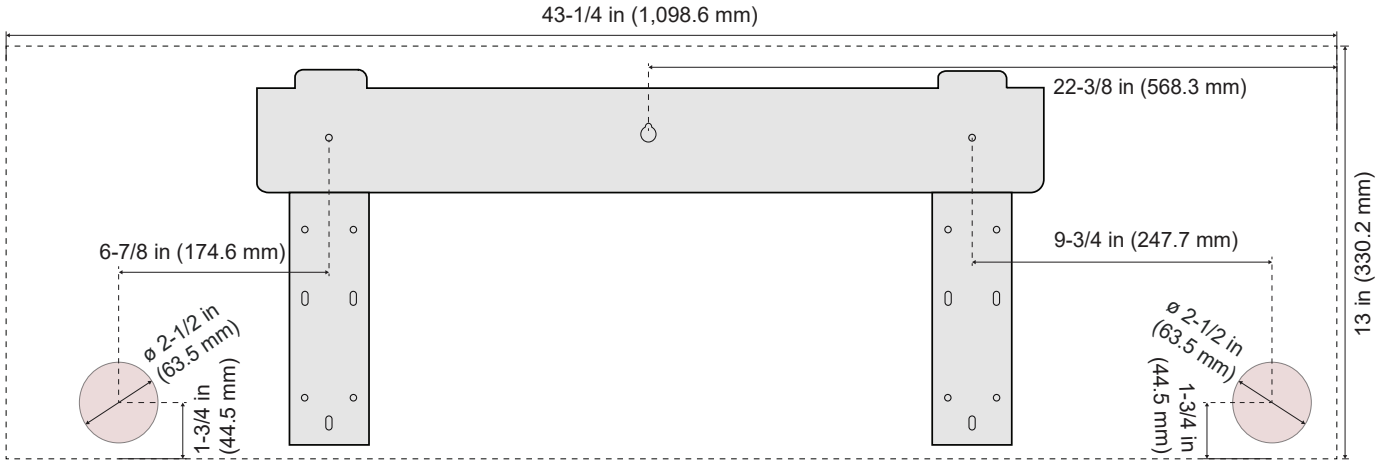

WT009GLSI24HLG (Air Handler) Specifications

Airflow Rate (cfm)	326 (Turbo) / 282.5 (Hi) / 235 (Med) / 188 (Lo) / 153 (Mute)
Sound Level (dBA)	43 (Turbo) / 40 (Hi) / 33 (Med) / 31 (Lo) / 30 (Mute)
Auto Air Circulation	2-Way Louver (Up-Down + Left-Right)
Dimensions (WDH)	32-1/4 in x 7-5/8 in x 12 in
Weight (lbs)	20.7

WT012GLSI24HLG (Air Handler) Specifications

Airflow Rate (cfm)	500 (Turbo) / 470 (Hi) / 411 (Med) / 323 (Lo) / 205 (Mute)
Sound Level (dBA)	46 (Turbo) / 44 (Hi) / 36 (Med) / 32 (Lo) / 30 (Mute)
Auto Air Circulation	2-Way Louver (Up-Down + Left-Right)
Dimensions (WDH)	36-1/2 in x 7-5/8 in x 12 in
Weight (lbs)	23.1

WT0(18/24)GLSI24HLG (Air Handler) Specifications

Airflow Rate (cfm)	735 (Turbo) / 676 (Hi) / 529 (Med) / 423 (Lo) / 394 (Mute)
Sound Level (dBA)	50 (Turbo) / 47 (Hi) / 43 (Med) / 38 (Lo) / 34 (Mute)
Auto Air Circulation	2-Way Louver (Up-Down + Left-Right)
Dimensions (WDH)	43-1/8 in x 8-3/4 in x 13 in
Weight (lbs)	30.9

Matching Table (# Circuits Utilized)

2-Circuits	(9000-24000) + (9000-24000)
3-Circuits	(9000-24000) + (9000-24000) + (9000-18000)
4-Circuits	(9000-24000) + (9000-18000) + (9000-12000) + (9000-12000)
5-Circuits	(9000-24000) + (9000-18000) + (9000-12000) + (9000-12000) + (9000-12000)

Piping Diameters

9000 BTU	1/4 in (Liquid) - 3/8 in (Suction)
12000 BTU	1/4 in (Liquid) - 3/8 in (Suction)
18000 BTU	1/4 in (Liquid) - 1/2 in Adapter Required (Suction)
24000 BTU	1/4 in (Liquid) - 5/8 in Adapter Required (Suction)
(All Necessary Adapters Provided with Condenser)	

Although very seldom, if the total demand from the combined group of indoor units' exceeds the rated capacity of the outdoor unit, the capacity of each indoor unit will be annotated accordingly.

Every indoor unit attached to a multi zone system will operate at a random, self regulated capacity, based on the actual demand it measures from the zone it is serving (Between 30% to 100% of its rated capacity) or turn off as needed.



Warranty Information and Length

Complete warranty details are available with the vendor or online at https://www.pdhvac.com/support/warranty/. This high quality system is eligible for up to **10** years limited warranty on the compressor, and **7** years on other internal parts. To qualify for this warranty, the system must be installed within 90 days by a registered technician. All other installations that are registered default to **5** years parts/compressor. Products unregistered qualify for only **1** year parts/compressor warranty.

Outstanding Features

- LED Display
- Energy Saving
- Ultra-Thin Design
- Dual Drain Options
- Customizable Timer
- Eco-Friendly Refrigerant
- Whisper-Quiet Operation
- Power Loss Memory Recovery

airlink

WiFi

Available Accessories

Part Number	Description
IKT-LCVR4P-KIT	*Decorative PVC Line Cover Kit*
IKT-LNBR-1/4-3/8	*BendAid Flexible Easy Bender Kit*
BRK-FRM-C-2P	*Folding Mounting Bracket w/ Leveler*
IKT-UVL32UL-AG	*UVC Bacterial Disinfection Kit*
IKT-SURPRK-DV2	*Ultimate Surge and Power Protection*